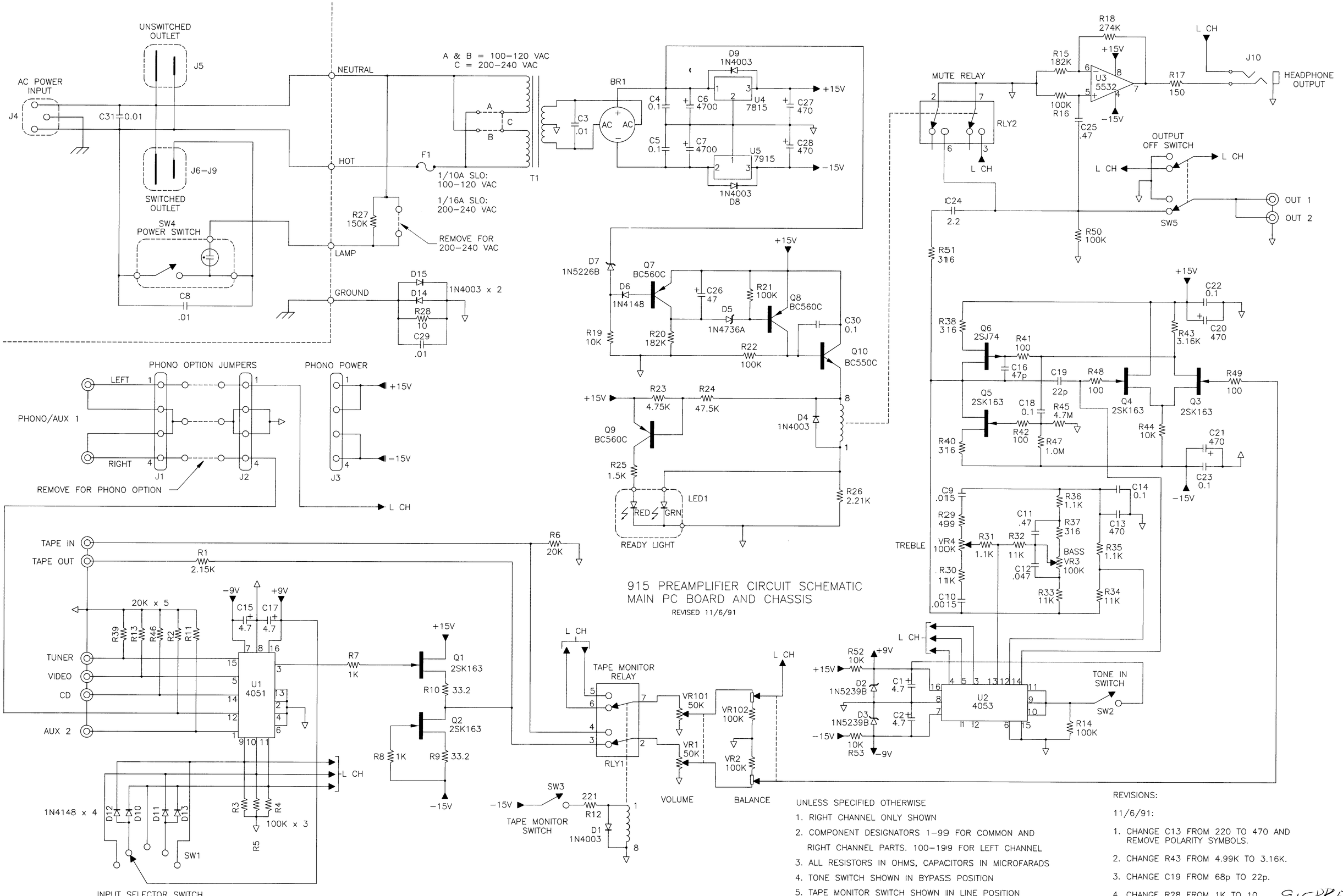

915 PREAMPLIFIER CIRCUIT SCHEMATIC
MAIN PC BOARD AND CHASSIS

REVISED 11/6/91

UNLESS SPECIFIED OTHERWISE

1. RIGHT CHANNEL ONLY SHOWN
2. COMPONENT DESIGNATORS 1–99 FOR COMMON AND RIGHT CHANNEL PARTS. 100–199 FOR LEFT CHANNEL
3. ALL RESISTORS IN OHMS, CAPACITORS IN MICROFARADS
4. TONE SWITCH SHOWN IN BYPASS POSITION
5. TAPE MONITOR SWITCH SHOWN IN LINE POSITION
6. MUTE RELAY SHOWN IN UNMUTED POSITION

REVISIONS:

11/6/91:

1. CHANGE C13 FROM 220 TO 470 AND REMOVE POLARITY SYMBOLS.
2. CHANGE R43 FROM 4.99K TO 3.16K.
3. CHANGE C19 FROM 68p TO 22p.
4. CHANGE R28 FROM 1K TO 10.
5. ADD C31, 0.01.

915PRE-AMP
HALER

PC 915CH