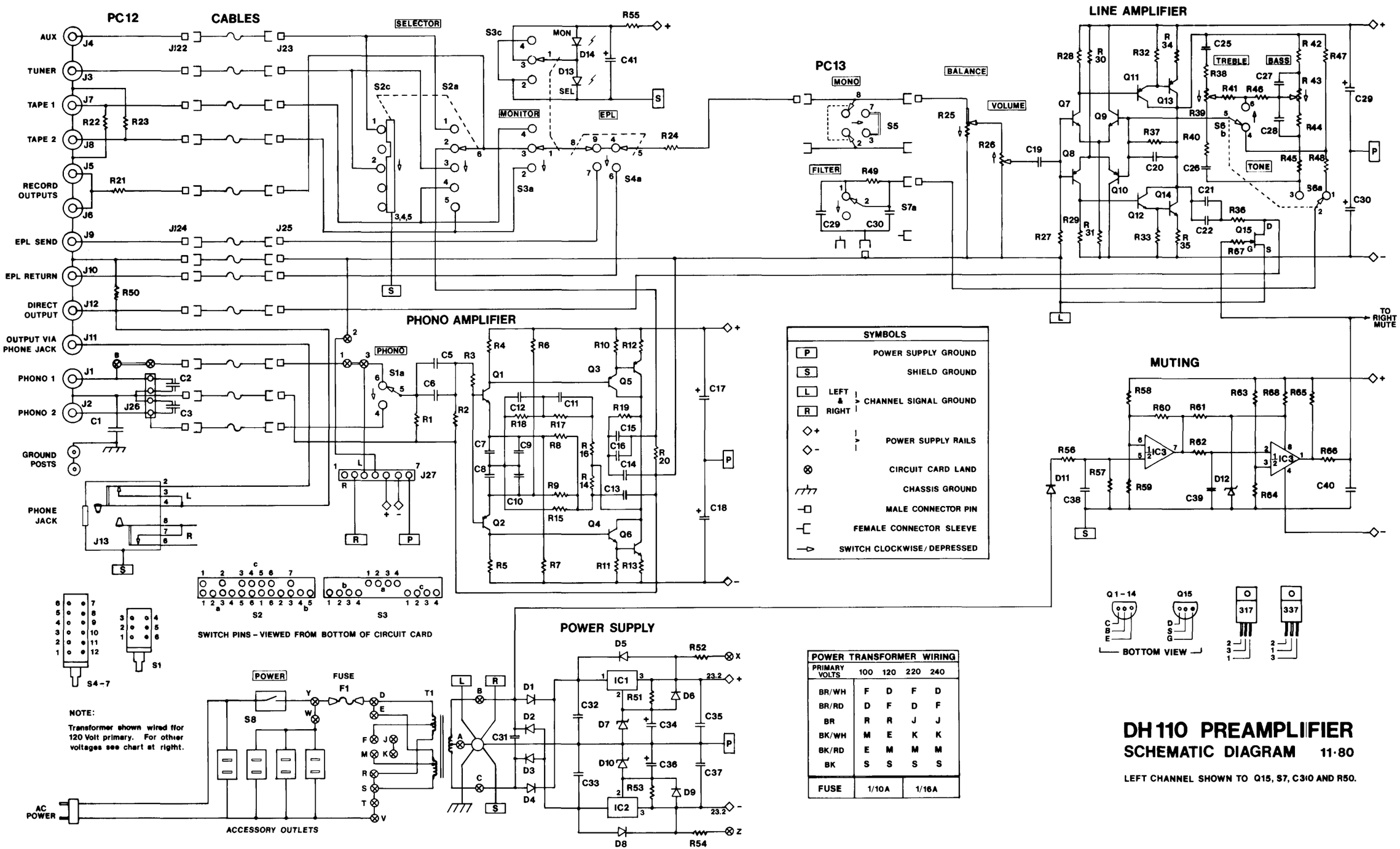

CABLE PIN ASSIGNMENTS

K1

PIN	
1	AUX L
2	TUNER L
3	RECORD L
4	LINE GND L
5	SHIELD
6	AUX R
7	RECORD R
8	TUNER R
9	LINE GND R
10	PHONO 2 R
11	PHONO GND R
12	PHONO 2 L
13	PHONO 1 R
14	PHONO GND L
15	PHONO 1 L

K2

PIN	
1	OUT LINE L
2	LINE GND L
3	OUT LINE R
4	LINE GND R
5	EPL SEND R
6	EPL RETURN R
7	SHIELD
8	EPL RETURN L
9	EPL SEND L
10	SHIELD
11	TAPE 1 L
12	TAPE 2 L
13	SHIELD
14	TAPE 2 R
15	TAPE 1 R

POWER TRANSFORMER WIRING

PRIMARY VOLTS	100	120	220	240
BR/WH	F	D	F	D
BR/RD	D	F	D	F
BR	R	R	J	J
BK/WH	M	E	K	K
BK/RD	E	M	M	M
BK	S	S	S	S
FUSE	1/10A		1/16A	

DH 110 PREAMPLIFIER
SCHEMATIC DIAGRAM 11·80

LEFT CHANNEL SHOWN TO Q15, S7, C310 AND R50.