PC-6

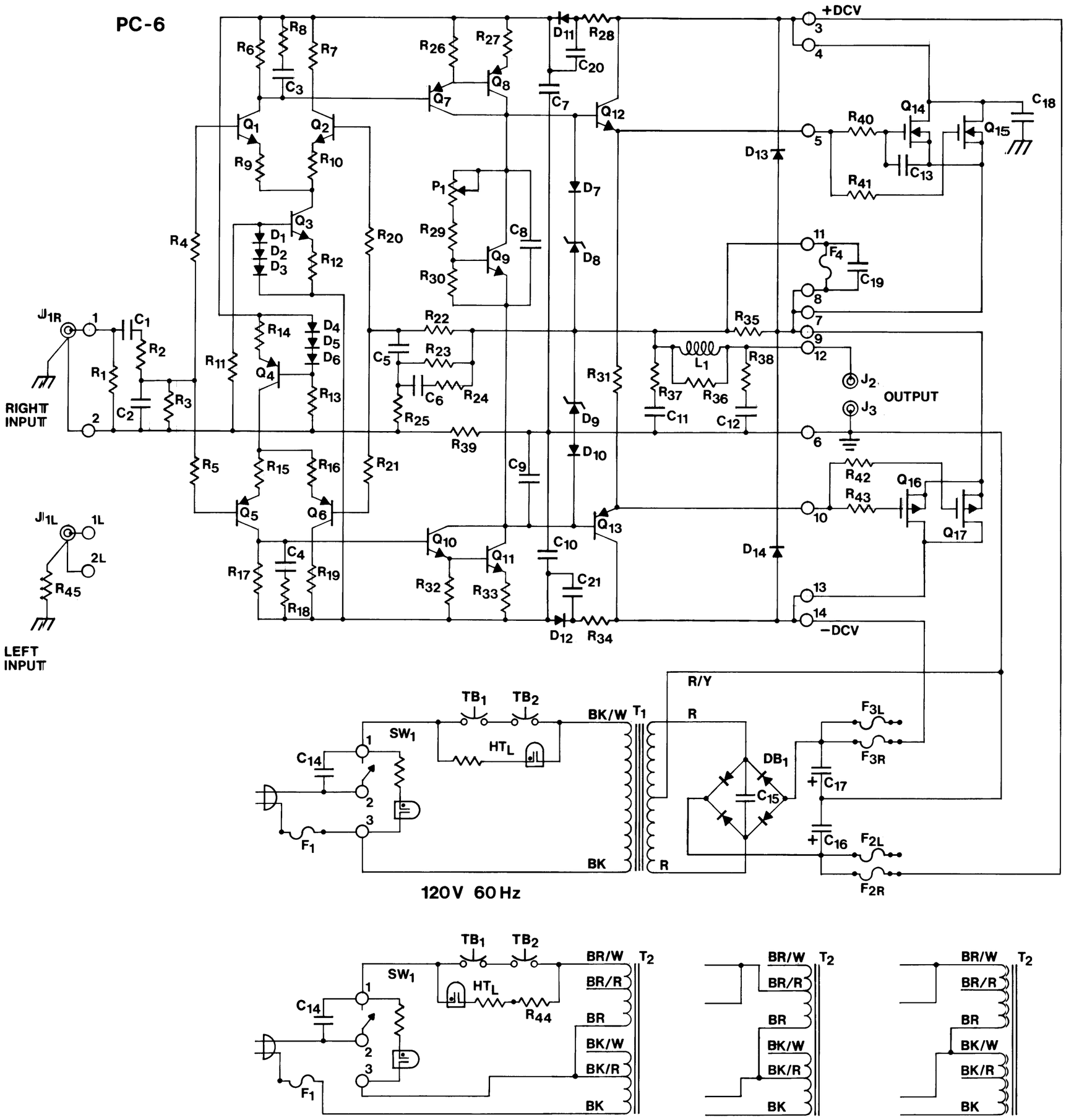

220V 50/60 Hz

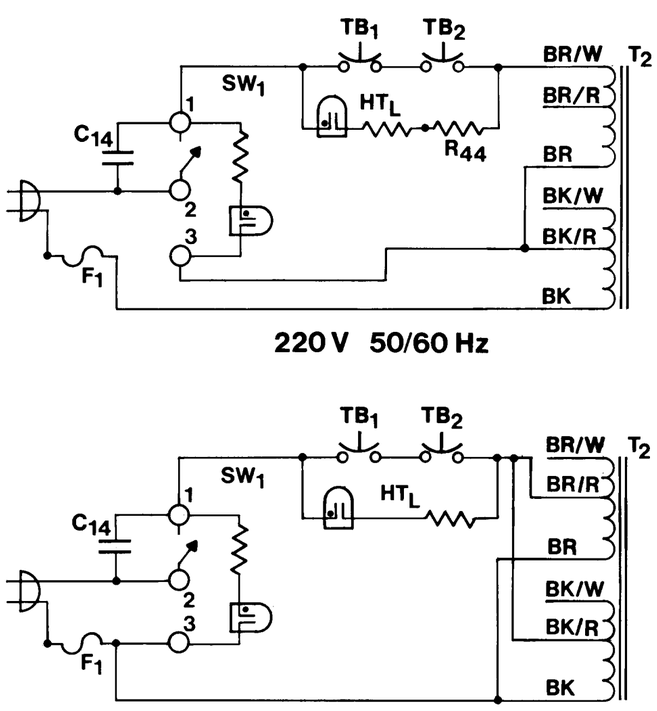

200V 50/60 Hz

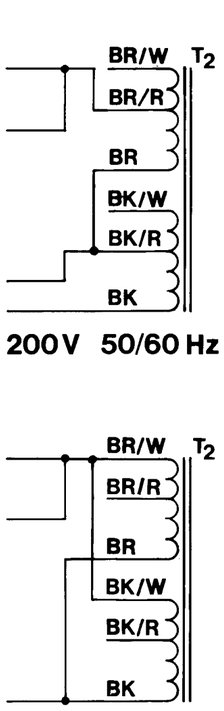

240V 50/60 Hz

100V 50/60 Hz

120V 50/60 Hz

SCHEMATIC DIAGRAM

© COPYRIGHT 1979 ALL RIGHTS RESERVED

DH-200/225
HAFLER

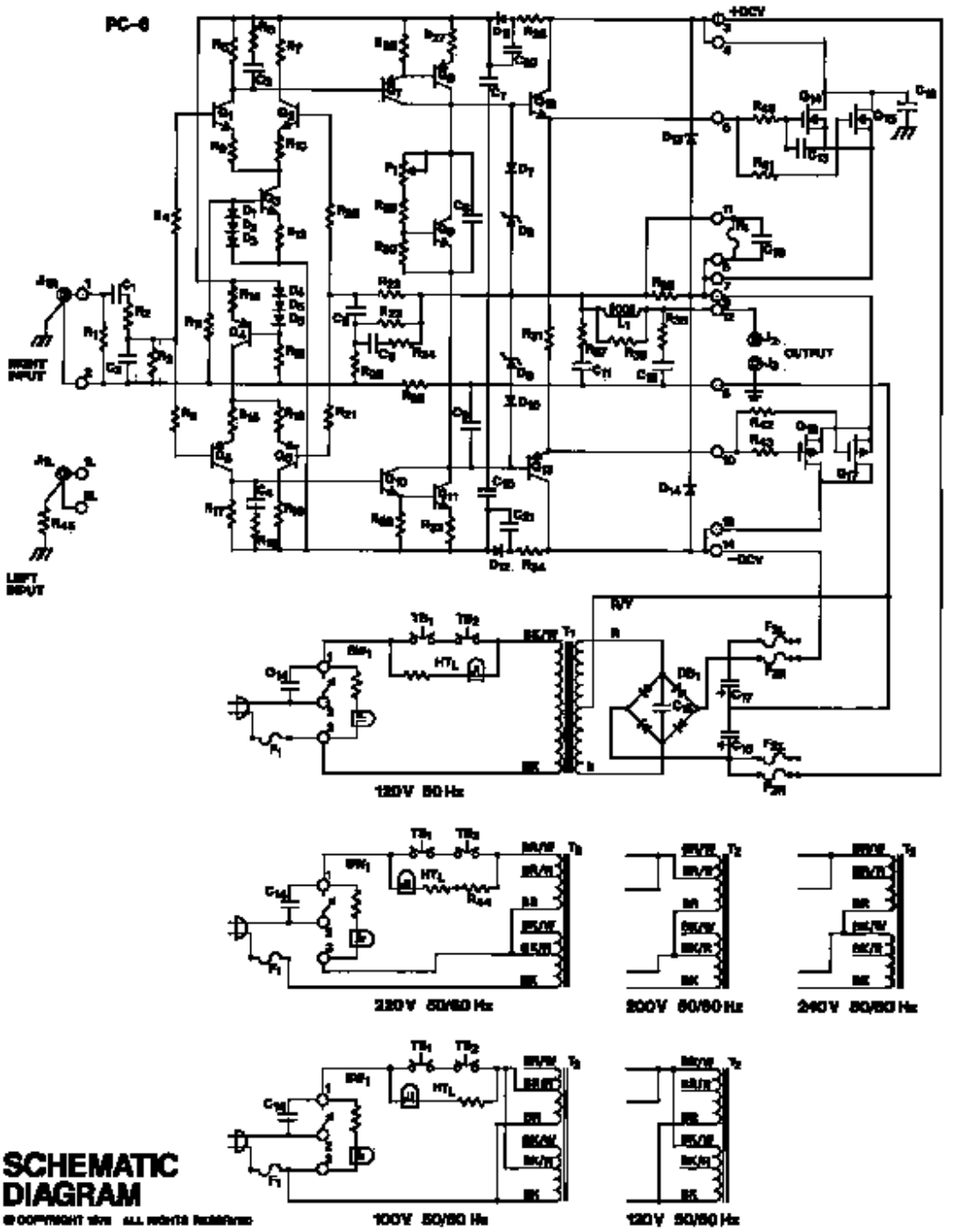

SCHEMATIC DIAGRAM

© COPYRIGHT 19xx ALL RIGHTS Reserved

DH-200/225
HAFLER