HAFLER EQ LEFT AND RIGHT FRONT CHANNELS

REVISION D

ENG. SCOTT CLIFFORD 2/22/00

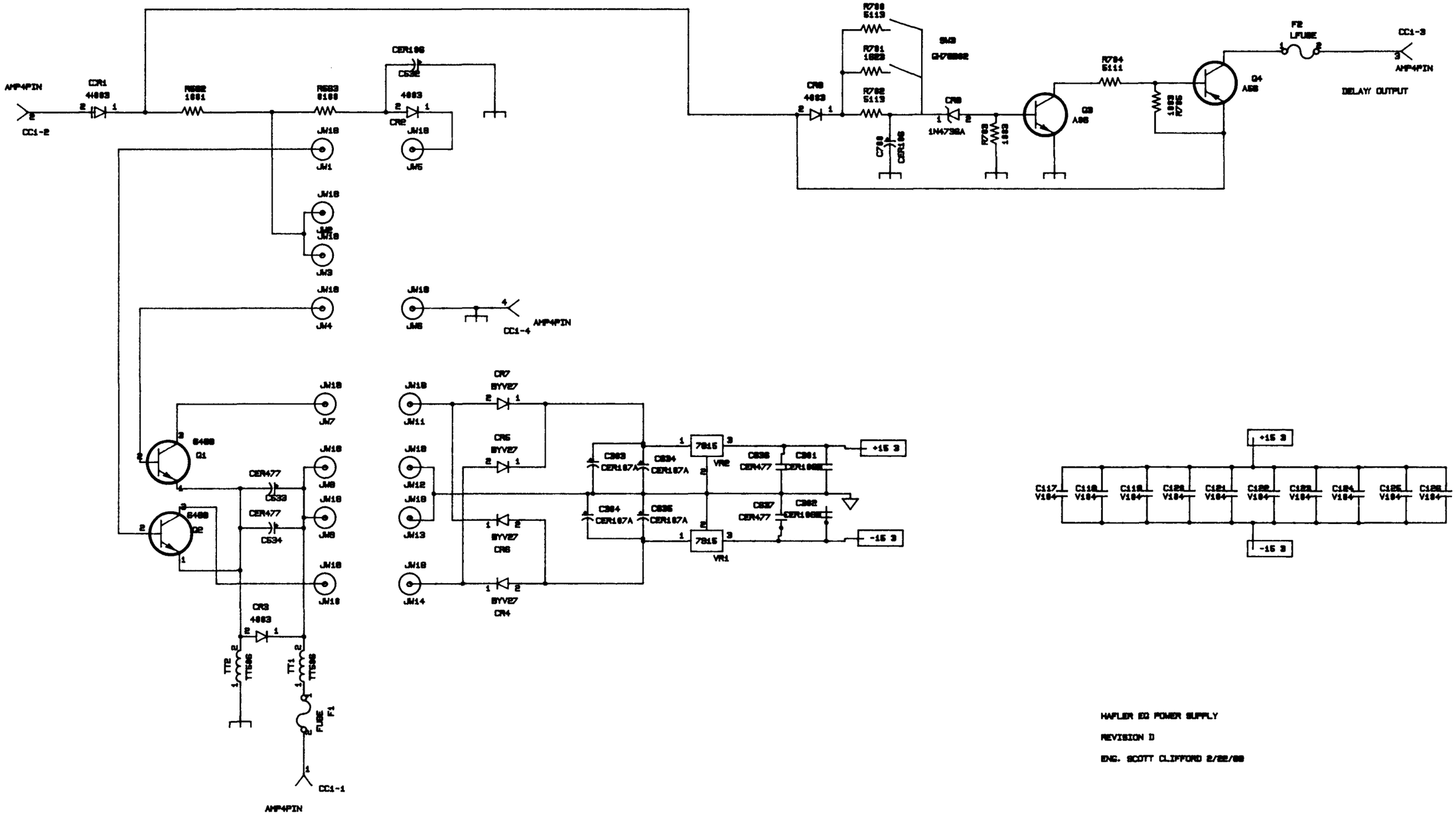

HAFLER EQ POWER SUPPLY

REVISION D

ENG. SCOTT CLIFFORD 2/22/88