NOTES: UNLESS OTHERWISE SPECIFIED
1: ALL RESISTOR VALUES ARE OHMS

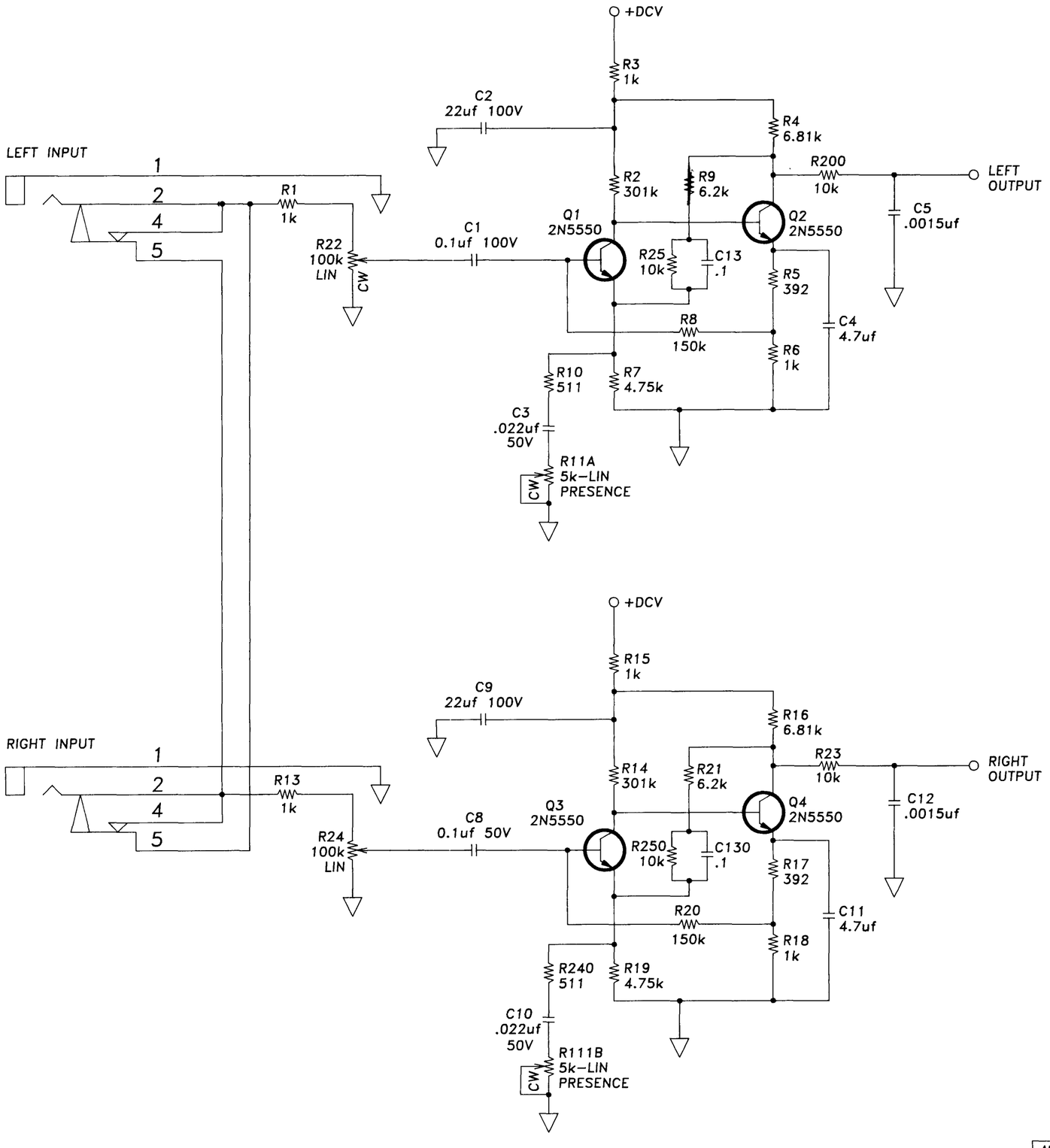

REFERENCE DESIGNATORS	HAFLER PART NO.	VALUE
R1,R3,R6, R13,R15,R18	RMP/4-1001	1K OHM
R10,R240	RMP/4-5110	511 OHM
R2,R14	RMP/4-3013	301k
R9,R21	RMP/4-6201	6.2k
R4,R16	RMP/4-6811	6.81K OHM
R23,R200	RMP/4-1002	10K OHM
R7,R19	RMP/4-4751	4.75K OHM
R8,R20	RMP/4-1503	150K OHM
R5,R17	RMP/4-3920	392 OHM
R22,R24	RVH-102	100K OHM
R11A,R11B	RVH-502	5K OHM
R25.R250	RMP/4-1002	10K OHM
C2,C9	CER-226B	22uF 100V
C1,C8	CYV-104	0.1uF 50V
C4,C11	CER-475C	4.7uF 50V
C5,C12	CYV-152	.0015uF 50V
C13,C130	CYV-104	0.1uF 50V
Q1,Q2,Q3,Q4	SS-205	2N5550
J5,J6	CCH-137	3PIN MOLEX
C3,C10	CYV-223	0.022uF 50V
SP1-SP5	CC-581	¼" PHONE JACK
JL,JR	CCH-227	¼" PHONE JACK
J15-J18	CCH-200	AMP PCB TAB

HAFLER
A DIVISION OF ROCKFORD CORPORATION

PC86 - G300

PART NO.	DRAWN BY:	SCALE:
PC8663SCH	PETE S.	NONE
	DATE: 2/26/91	APPD BY:

ANY TECHNICAL QUESTIONS REGARDING THIS PRINT SHOULD BE REFERRED TO ANDY SZABO (602)967-3565 EXT. 3036

MATERIAL/FINISH

SCH-PC8663

NOTE: UNLESS OTHERWISE SPECIFIED
1: DUPLICATE PART DESIGNATORS DO EXIST.
PLEASE TAKE CARE TO IDENTIFY THE CORRECT
PC BOARD PARTS LIST IN THE EVENT OF A DEFECT
2: ALL RESISTANCES ARE IN OHMS
3: Q1 AND Q2 ON THE PC-65 BOARD ARE BETA-MATCHED
REORDER THIS PART IN PAIRS
4: LEFT CHANNEL ONLY SHOWN , RIGHT CHANNEL DESIGNATORS
ARE IN PARENTHESES
5: ALL SWITCHES SHOWN IN OFF POSITION

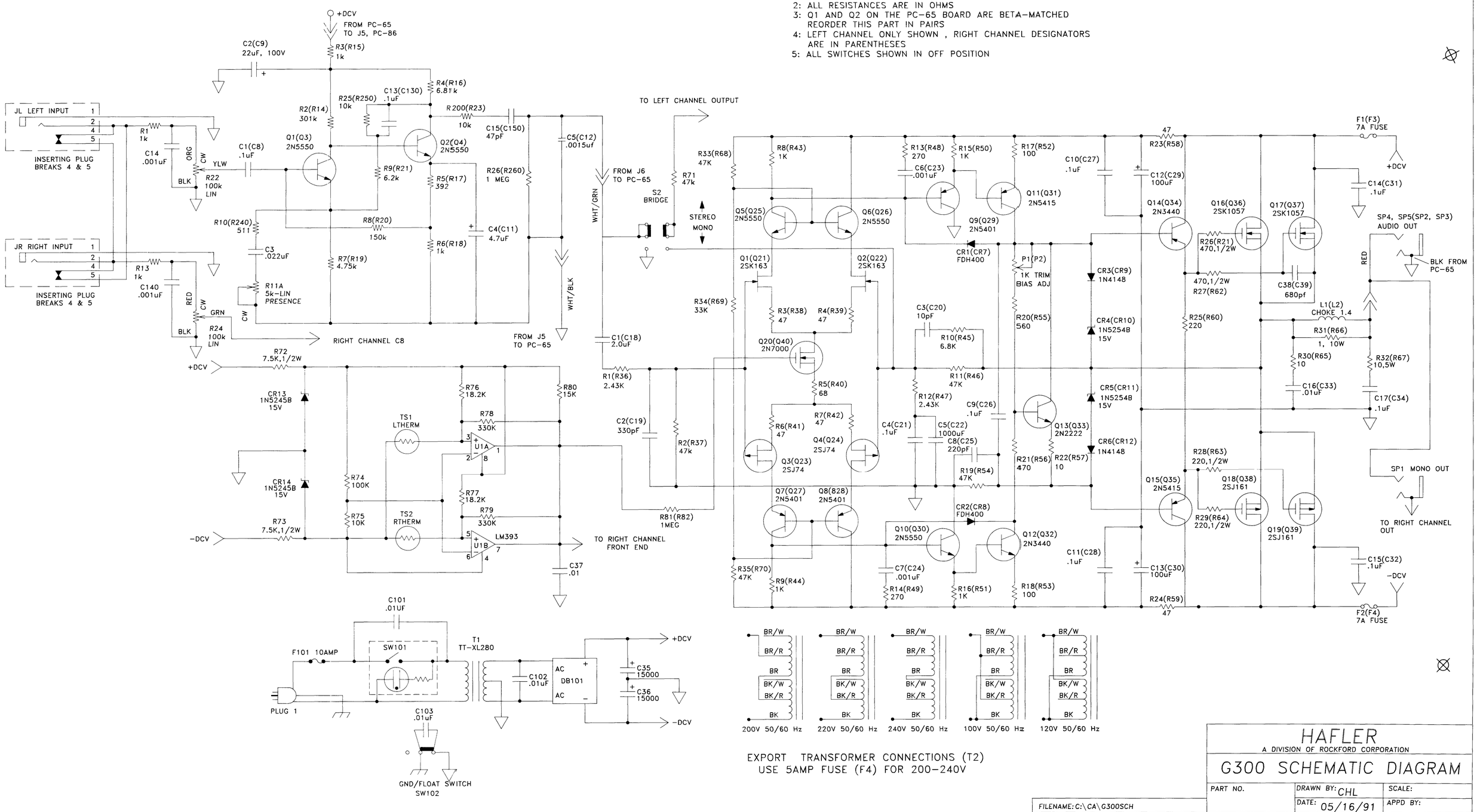

EXPORT TRANSFORMER CONNECTIONS (T2)
USE 5AMP FUSE (F4) FOR 200-240V

HAFLER
A DIVISION OF ROCKFORD CORPORATION

G300 SCHEMATIC DIAGRAM

PART NO.	DRAWN BY: CHL	SCALE:
	DATE: 05/16/91	APPD BY:

FILENAME: C:\CA\G300SCH

ANY TECHNICAL QUESTIONS REGARDING THIS PRINT SHOULD BE REFERRED TO Carl Lindquist (602)967-3565 EXT. 3033

MATERIAL/FINISH