P-225 43% of orig (p.14) this image solid

PC-19C RIGHT CHANNEL

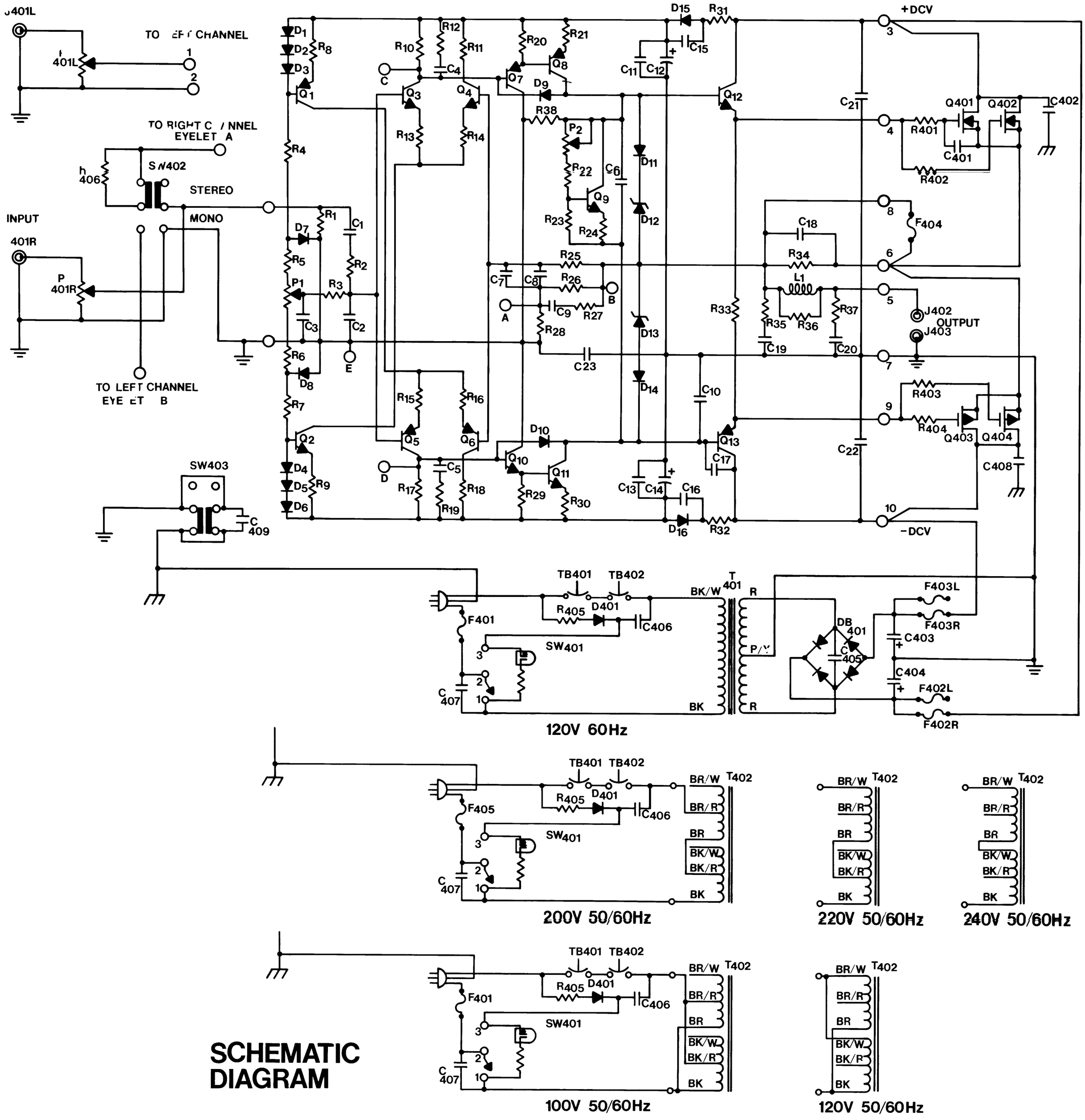

SCHEMATIC DIAGRAM

P-225
HAFLER