SECTION A
P-500 42%
R.21 .2/86

S402
STEREO
MONO
TO RIGHT CHANNEL EYELET A
R407
TO LEFT CHANNEL EYELET B

J404
J403
J402
J401
J403L
J402L
J401L
C408

120V 50/60HZ

TB401
TR401
TS401
TB402
TS402
FAN
TO PC 22 PINS 4&5
F401
R 408
R 409
C 407
S 401
JP 401
JP 402
T401
BK
BK/R
BK/W
BR
BR/R
BR/W

R
R/Y
R
DB 401
C 406
C405
C404
F 402
F 402L
F 403
F 403L
+90V
-90V

RIGHT CHANNEL
PC - 19

D6 D5 D4 R7 R6 P1 R5 R4 D3 D2 D1
R9 Q2 D8 C3 D7 R1 Q1 R8
E C2 R3 R2 C1
D C
R17 Q5 R15 R13 Q3 R10
R19 C5 C4 R12
R18 Q6 R16 R14 Q4 R11
A C7
R29 Q10 R28 C9 C8 R23 R22 P2 R38 D9 Q7 R20
D10 R27 R26 R25
R30 Q11 C23 B R24 Q9 Q8 R21
C6
C13 C14 D14 D13 D12 D11 C11 C12 C15 D15
D16 C16 C10 R31
C17 R32 Q13 R33 Q12
R35
C19
R36 L1 R34 C18
C20 R37
C22 C21
10 9 7 5 6 8 4 3

R 406 R 405 R 404
Q 404
Q 405
Q 406
C 403
6 3 9 RY 401
F 404
R 403 R402 R401
C 401 Q401 Q402 Q403
C402

J405 OUTPUT
J406

P 500 sheet
MAILER

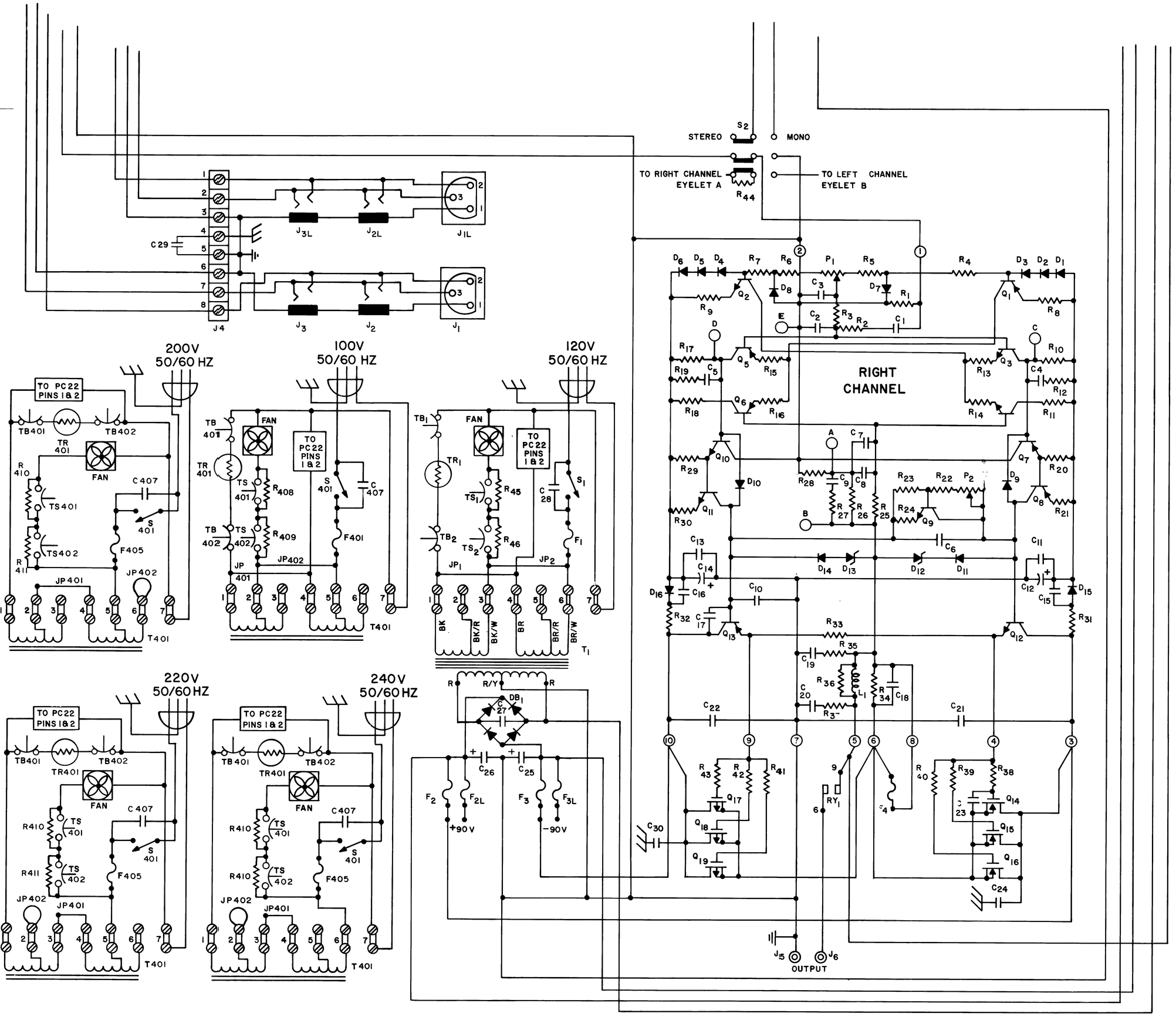

STEREO
MONO
TO RIGHT CHANNEL EYELET A
TO LEFT CHANNEL EYELET B
RIGHT CHANNEL
200V 50/60 HZ
100V 50/60 HZ
120V 50/60 HZ
220V 50/60 HZ
240V 50/60 HZ
TO PC22 PINS 1 & 2
FAN
+90V
-90V
OUTPUT

HAFLER

FROM LEFT OUTPUT
J107
TO LEFT CHANNEL
J102
J102L
J101 B
J101 A
J101L B
J101L A
J106
J105
J103
J104
PC-20
PC-21R
PC-21L
PC-22
TO TB1, TB2
RY1
+15V
-15V
G
R
IC1A
IC1B
IC2A
IC2B
IC3A
IC4A
IC4B
IC5A
IC5B
IC6A
IC6B
IC7A
IC7B
IC7C
IC7D
R101 R102 R103 R104 R105 R106 R107 R108 R109 R110 R111 R112 R113
C101 C102 C103 C104 C105
P101 P102
R118 R119 C106
R120 R121 C107 R122 P103 R123
R114 R115 R115L R116 R117
R114L R116L R117L
R118L R119L C106L R120L R121L C107L R122L P103L R123L
C101L P101L C104L R101L R102L C103L R104L R106L R105L R107L R108L R109L R110L R111L P102L R112L R113L C105L
C123
R124 R125 C108 C109 C110
R124L R125L C108L C109L C110L
R126 R127 D101 D102
R126L R127L D101L D102L
R128 R129 R130 R131 C111 C112 C113
R132 R133 R134 R135 R136 R137 R138 R139 C114 R140 R141 R142 R143 C115 R144
D103 D104 Q101 C116 D106 D105 R145
R201 D201 C201 D202 R202
R201L D201L C201L D202L R202L
R302 D302 D303 R303 D301 R301
R146 R147
C121 C119 C117 D109 D107
C122 C120 C118 D110 D108