IRIS TRANSMITTER

PIN CL TU VIB A_1 A_2 T_1 T_2
1 2 ⊙ 3 4 5 6 7

CLR MODE NOR
1 2 3

100K 100K

CNT KY DET

BC 416

SEL KY DET

BATT 100K SEL CNT SX

100K .47 10M 10K 10K 4070/4

RE-FRESH 10K

SX TIMER ~3 SEC

SX SX KY SX

PWR SW BC-416

+6V 47 mF

10K BC 414 10K 100K RUN 47K

RD RD INV 10K 4070/4

COMMAND INJECT RESISTORS 470K

D_0 D_1 D_2 D_3 D_4 D_5

4051 DATA MUX

D_0 D_1 D_2 D_3 D_4 D_5 D_6 D_7 A B C SCAN OUT

8

DATA

ADC 0804 NAT

8-BIT A/D

$\overline{RD}$ $\overline{CS}$ (-) (+) $\overline{WR}$

A/D CLK OSC 10K 130 pF

WRITE 1, 65

100K (1-63, 65-127)

(64-127) (VOL WORD)

4070/4 DATA POL GATE

COMPL 4070/4

100K V/B TRUE BYTE

AM

Q_4 Q_3 Q_2

+6V 202K 2.2K

FM MOD BC 414

49.4K 1% 82.5K 1% 100K 1%

LM 393/2 CARRIER OSC

300 pF

150K 1% 47.5K 1%

1K

FREQ TP AM MOD

100K 4.7K

PCM (TRUE ϕ) TP (SHORT ± FOR FREQ CHK)

AM TP

IR AMPL BATT

4.7K MPS 6651

100K BC 414

IR TP 1.2 IR 160 mW PULSES (~2W ELECTRICAL)

1 = 35 kHz

0 = 25 kHz

* 1-2% AS PER RCVR

BUFF/HOLD HYS DECISION POT SEL

4053

OSC 10M 10M .47 1.0M 3080 2.2M 2.2M 3080 10M 100K .01 CER VOL SHAFT

DIFF CAP SNS BAL SHFT .01 CER 100K 2.2M 10M 100K 4.7 µF

2.7K VDD 100K

6.2K VOL 25K LIN 47K BAL 25K LIN

RESISTOR PULLS 120 CLOCK TO ~ -206 ~ 71.0% OF 8-BIT CODE

100K 1% 100K 1% .001 10% SEQR 1% 100K 1% 10K 1%

+6V

SEQ CLK ~1.25 kHz LM 393/2

SEQUENCER 4520

Q_0 Q_1 Q_2 Q_3 $\overline{CLK_2}$ Q_4 Q_5 Q_6 Q_7

$\overline{CLK_1}$ $\overline{EN_1}$ $\overline{EN_2}$ RS_1 RS_2 Q_7

.022 10% +6 1M

FRAME TP 10K 1% 2.15K 1% @128

BATT 47 90m PULSE BC414

+6V BATT IN 4003

IRIS TRANSMITTER HAFLER

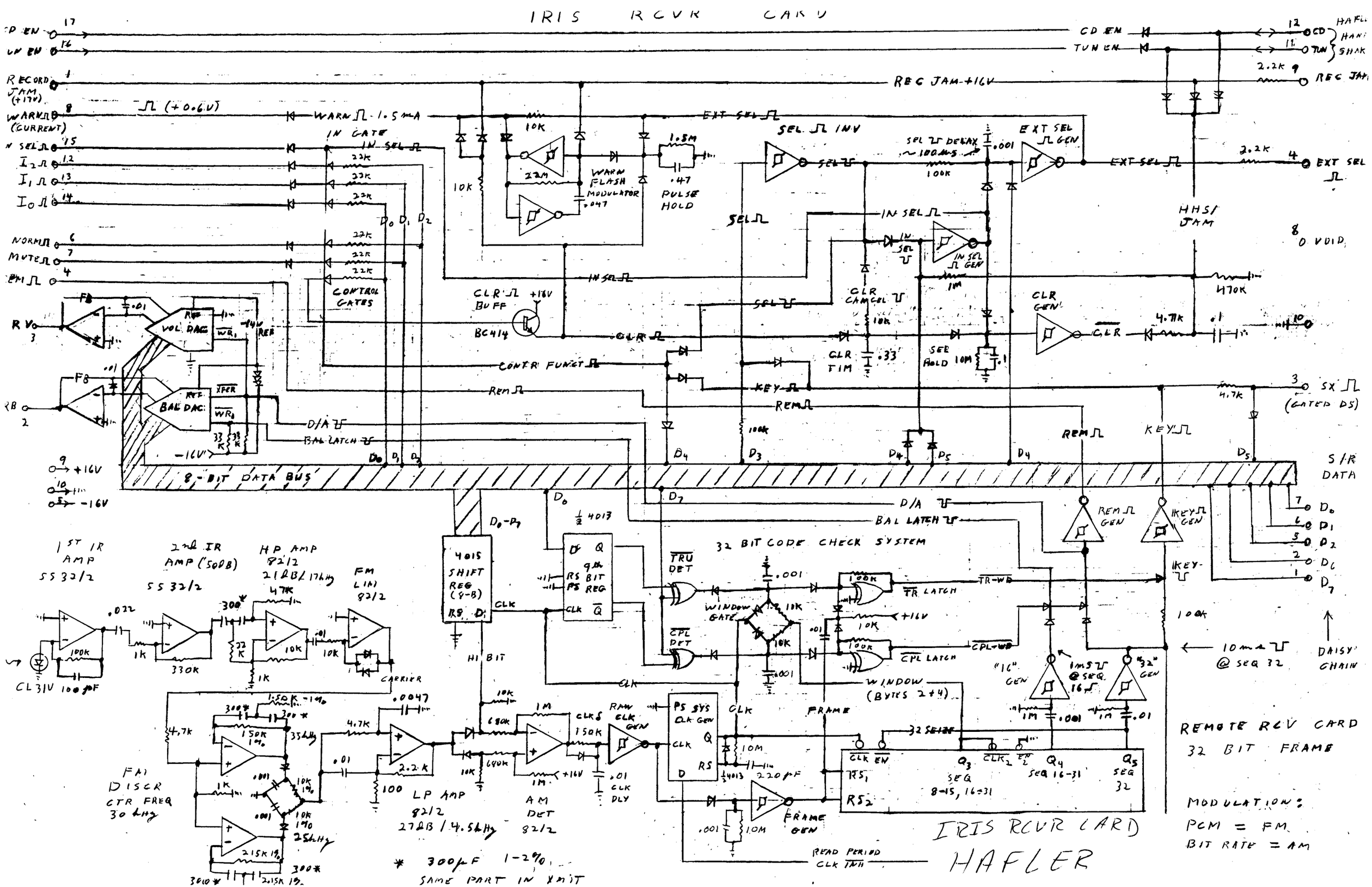
IRIS RCVR CARD
CD EN
TUN EN
RECORD JAM (+17V)
WARN (CURRENT)
IN SEL
NORM
MUTE
REM
RV
RB
REC JAM +16V
EXT SEL
WARN 1.5 mA
IN GATE
IN SEL
CONTROL GATES
WARN FLASH MODULATOR
PULSE HOLD
SEL INV
SEL DELAY ~100 μs
EXT SEL GEN
HHS/JAM
VOID
CLR BUFF
BC414
CLR CANCEL
CLR GEN
CLR TIM
SEL HOLD
CONTR FUNCT
REM
KEY
D/A
BAL LATCH
VOL DAC
BAL DAC
8-BIT DATA BUS
+16V
-16V
SX (GATED DS)
S/R DATA
REM GEN
KEY GEN
1ST IR AMP SS32/2
2nd IR AMP (50dB) SS32/2
HP AMP 82/2 21dB/17kHz
FM LIM 82/2
CARRIER
CL 31V 100 pF
4015 SHIFT REG (8-B)
HI BIT
½ 4013
9th BIT REG
32 BIT CODE CHECK SYSTEM
TRU DET
CPL DET
WINDOW GATE
TR LATCH
CPL LATCH
TR-WD
CPL-WD
WINDOW (BYTES 2+4)
"16" GEN
"32" GEN
1ms @ SEQ 16
10 ms @ SEQ 32
DAISY CHAIN
FM DISCR CTR FREQ 30 kHz
LP AMP 82/2 27dB/4.5kHz
AM DET 82/2
RAW CLK GEN
PS SYS CLK GEN
FRAME
FRAME GEN
READ PERIOD CLK INH
32 SEIZE
SEQ 8-15, 16-31
SEQ 16-31
SEQ 32
REMOTE RCV CARD
32 BIT FRAME
MODULATION:
PCM = FM
BIT RATE = AM
* 300 pF 1-2%
SAME PART IN XMIT
IRIS RCVR CARD
HAFLER