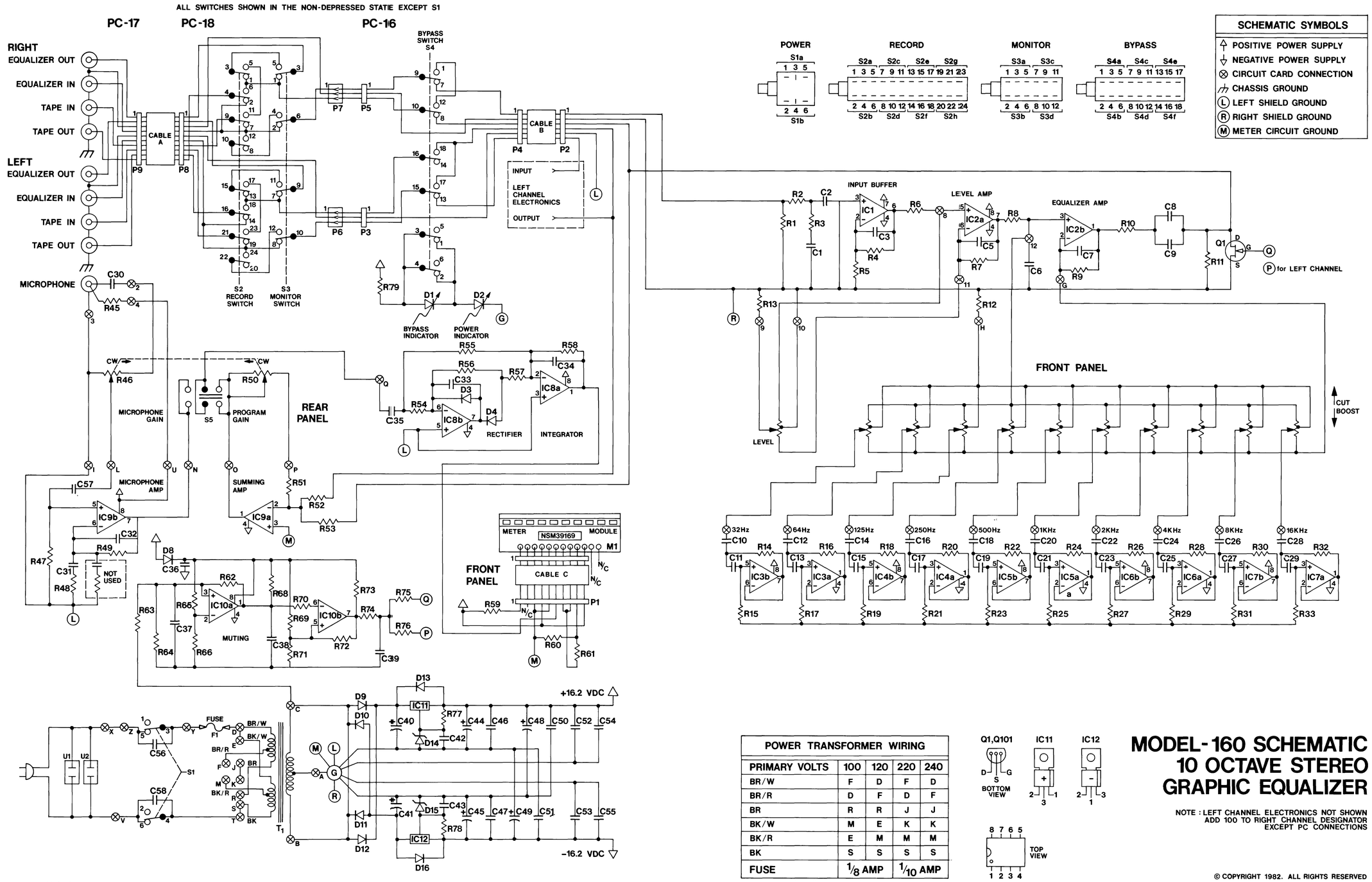

CONNECTIONS SHOWN FOR 120 VAC LINE

POWER TRANSFORMER WIRING				
PRIMARY VOLTS	100	120	220	240
BR/W	F	D	F	D
BR/R	D	F	D	F
BR	R	R	J	J
BK/W	M	E	K	K
BK/R	E	M	M	M
BK	S	S	S	S
FUSE	1/8 AMP		1/10 AMP	

MODEL-160 SCHEMATIC 10 OCTAVE STEREO GRAPHIC EQUALIZER

NOTE : LEFT CHANNEL ELECTRONICS NOT SHOWN
ADD 100 TO RIGHT CHANNEL DESIGNATOR
EXCEPT PC CONNECTIONS

© COPYRIGHT 1982. ALL RIGHTS RESERVED