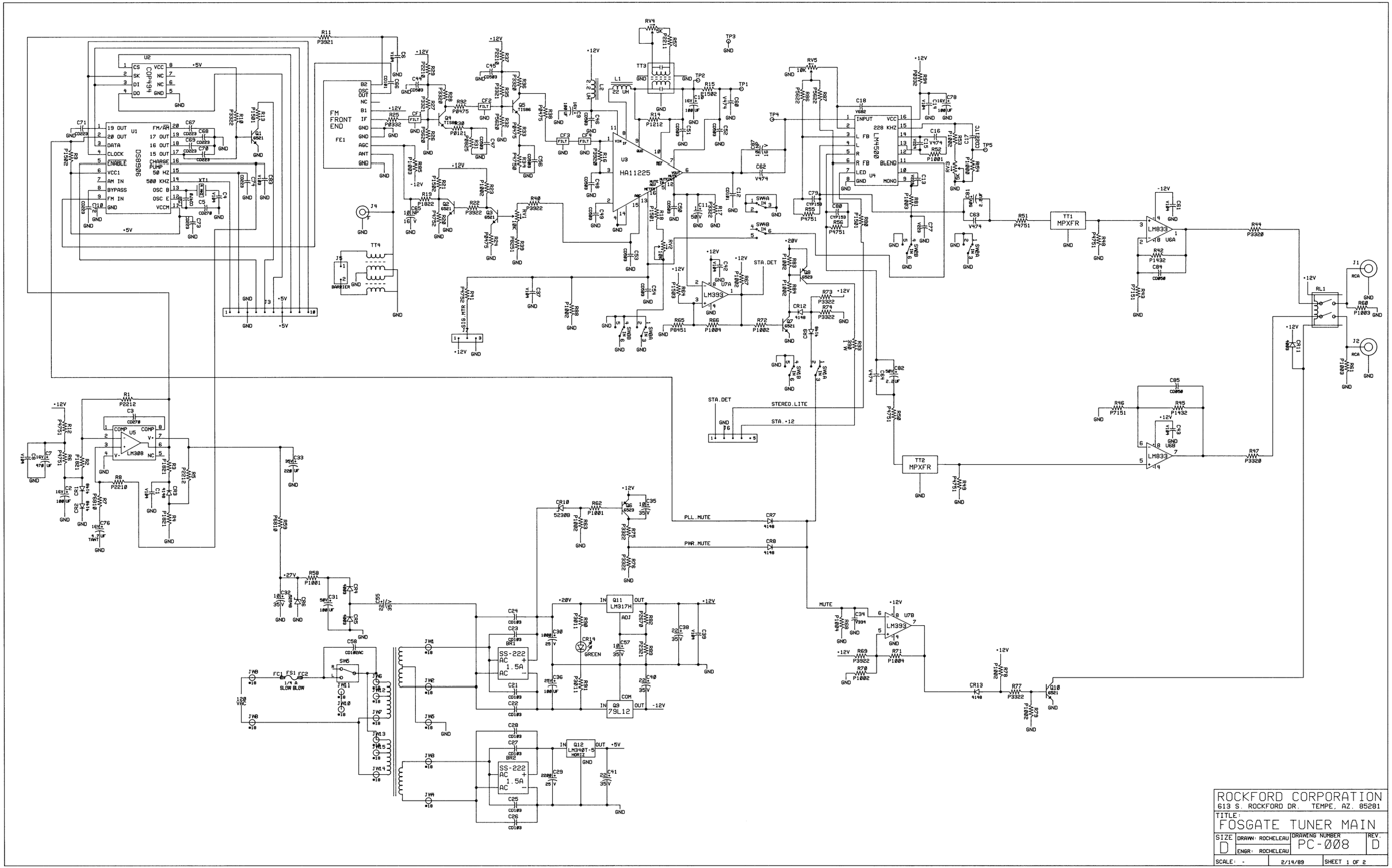

ROCKFORD CORPORATION
613 S. ROCKFORD DR. TEMPE, AZ. 85281

TITLE:
FOSGATE TUNER MAIN

SIZE	DRAWN: ROCHELEAU	DRAWING NUMBER	REV.
D	ENGR: ROCHELEAU	PC-008	D

SCALE: - | 2/14/89 | SHEET 1 OF 2