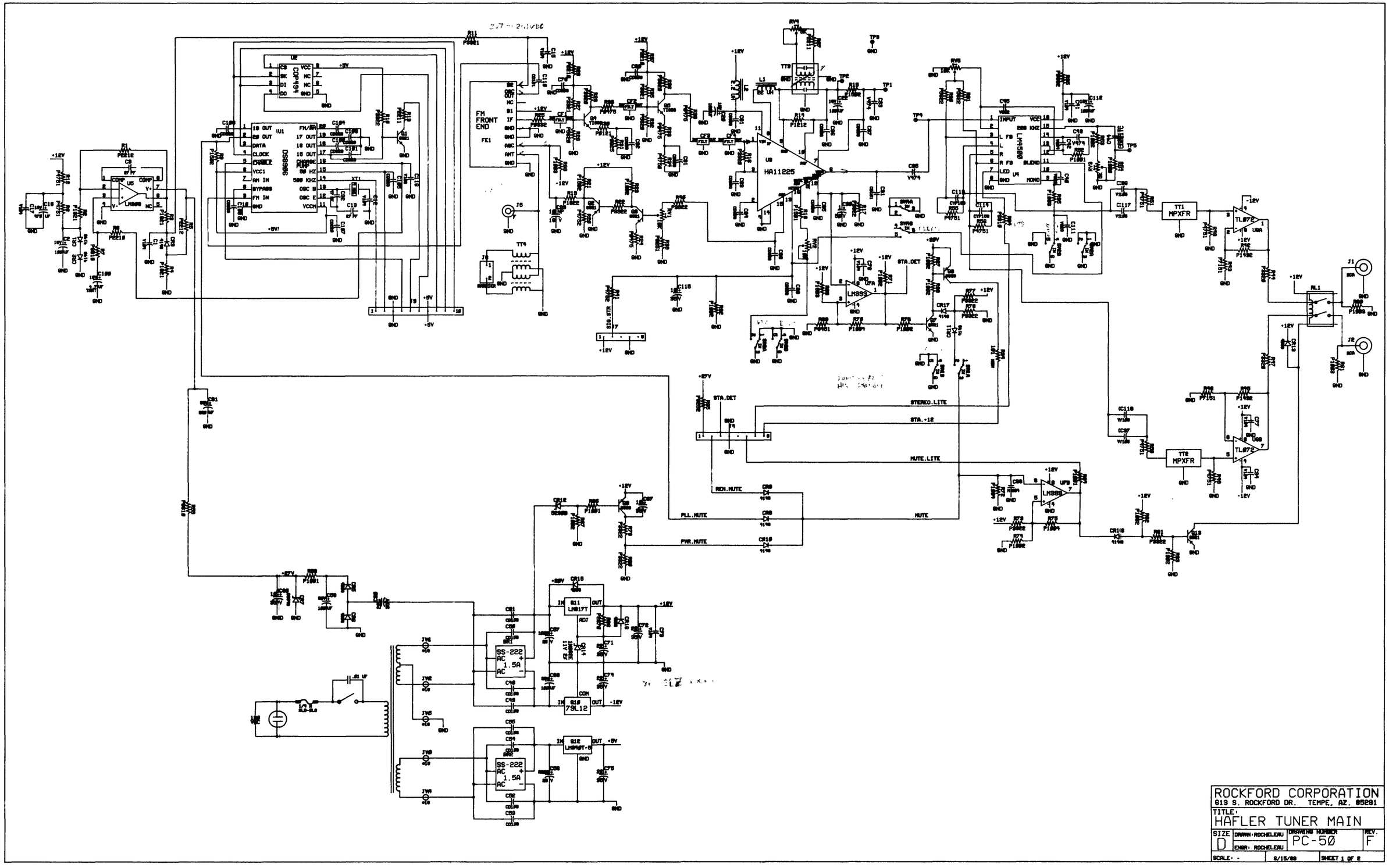

FM FRONT END
FE1
DS8986
COP494
HA11225
LM4500
LM393
LM386
TL072
TT1 MPXFR
TT2 MPXFR
TT3
TT4
RL1
STA.DET
STEREO.LITE
STA.+12
MUTE.LITE
MUTE
REM.MUTE
PLL.MUTE
PWR.MUTE
SS-222
1.5A
LM317T
79L12
LM340T-5
ROCKFORD CORPORATION
613 S. ROCKFORD DR. TEMPE, AZ. 85281
TITLE:
HAFLER TUNER MAIN
SIZE D
DRAWN: ROCHELEAU
ENGR: ROCHELEAU
DRAWING NUMBER PC-50
REV. F
SCALE: -
6/15/88
SHEET 1 OF 2