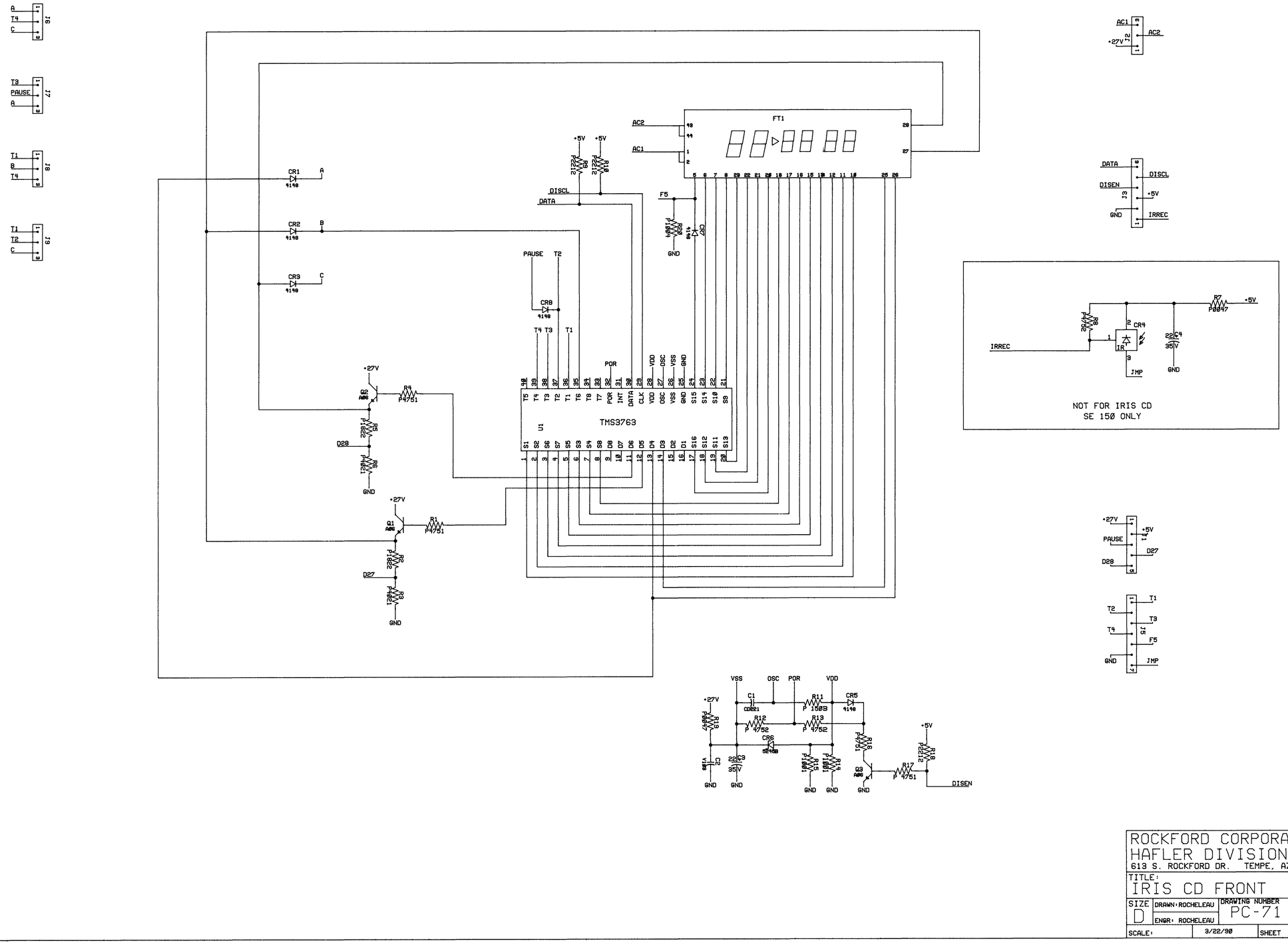

ROCKFORD CORPORATION
HAFLER DIVISION
613 S. ROCKFORD DR. TEMPE, AZ. 85281

TITLE:
IRIS CD FRONT

SIZE	DRAWN: ROCHELEAU	DRAWING NUMBER	REV.
D	ENGR: ROCHELEAU	PC-71	A
SCALE:	3/22/90	SHEET 1	