

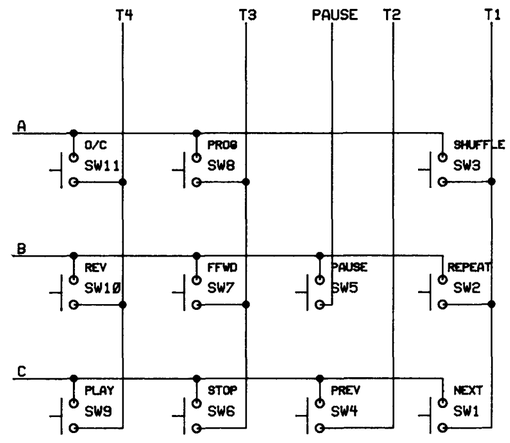

ROCKFORD CORPORATION
HAFLER DIVISION
613 S. ROCKFORD DR. TEMPE, AZ. 85281

TITLE:
IRIS CD SWITCH PCB

SIZE	DRAWN: ROCHELEAU	DRAWING NUMBER	REV.
C	ENGR: ROCHELEAU	PC-72	A
SCALE:	01/26/90	SHEET 1	