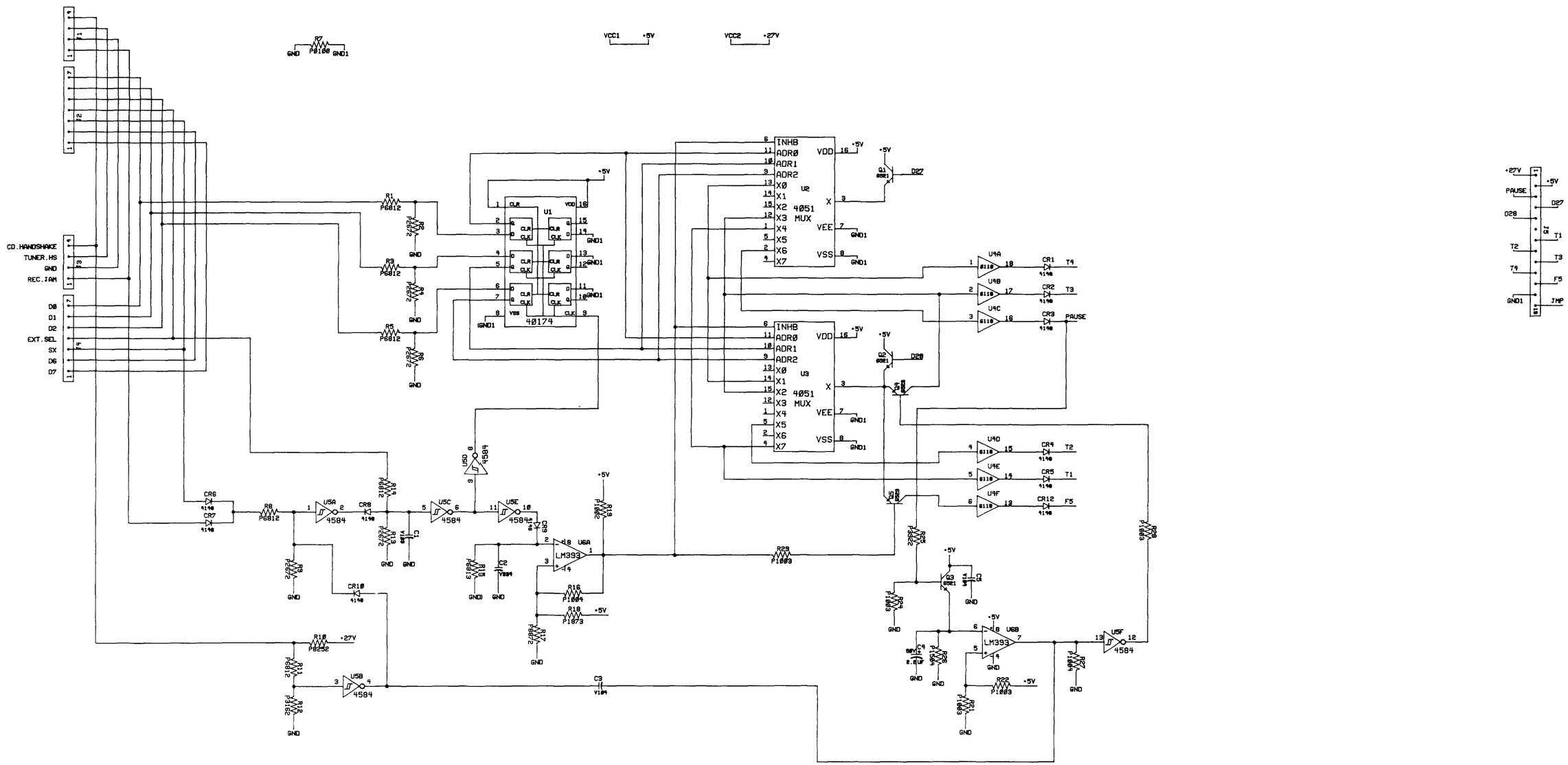

ROCKFORD CORPORATION
HAFLER DIVISION
613 S. ROCKFORD DR. TEMPE, AZ. 85281

TITLE:
IRIS CD INTERFACE

SIZE	DRAWN: ROCHELEAU	DRAWING NUMBER	REV.
D	ENGR: ROCHELEAU	PC-73	A
SCALE:	01/29/90	SHEET 1	

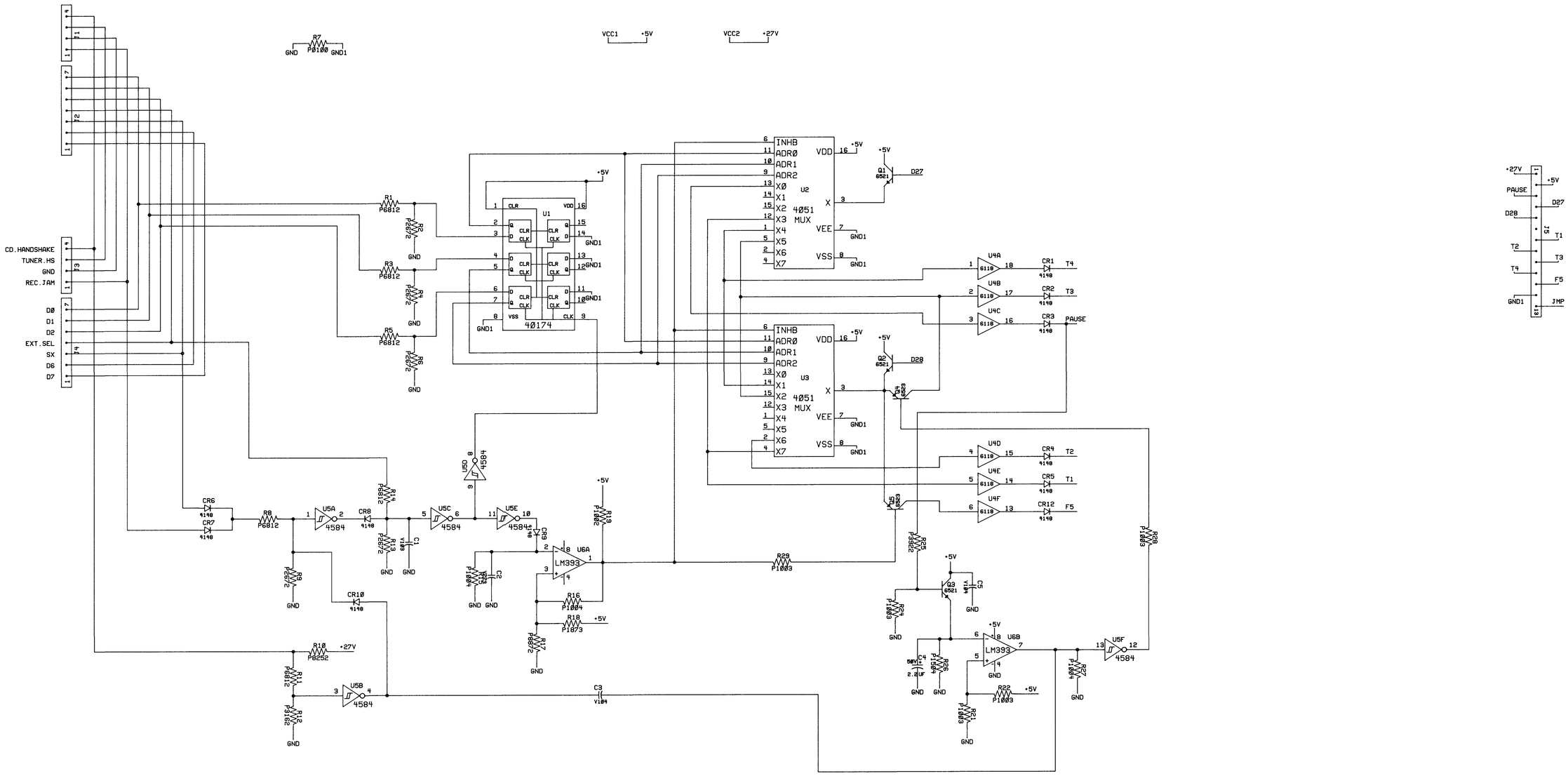

ROCKFORD CORPORATION
HAFLER DIVISION
613 S. ROCKFORD DR. TEMPE, AZ. 85281

TITLE:
IRIS CD INTERFACE

SIZE	DRAWN: ROCHELEAU	DRAWING NUMBER	REV.
D	ENGR: ROCHELEAU	PC-9H02G	B

SCALE: 8/18/89 SHEET 1