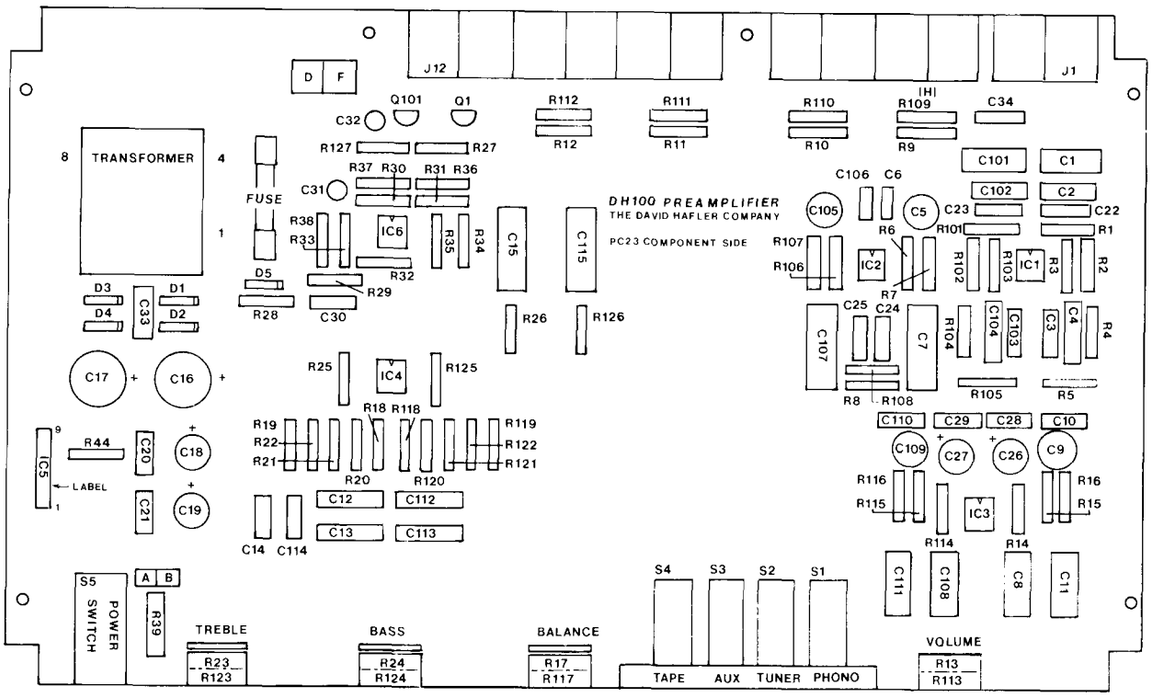

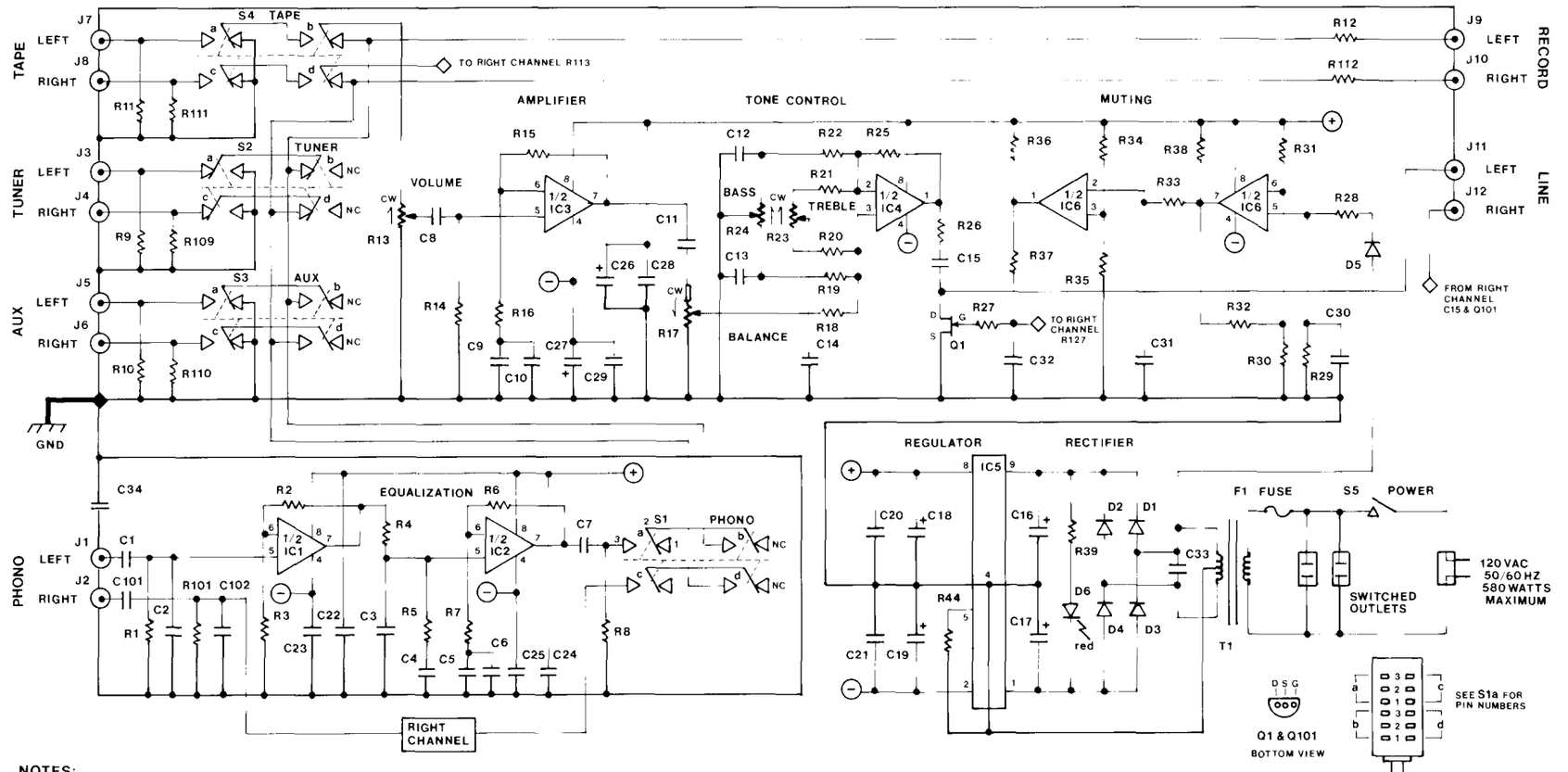

NOTES:

1. Left channel shown. Right channel part numbers add 100.
2. S2 shown depressed / TUNER selected.
3. Unused switch contacts tied to pin 2.
4. Circled numbers are DC voltages refered to GND, no signal.
5. Uncircled numbers are signal voltage from 0.005V/1000HZ applied to PHONO (selected), VOLUME full CW, all others at detent.

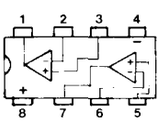

IC1-IC4, IC6 (BOTTOM)

PREAMPLIFIER DH100

SCHEMATIC DIAGRAM APRIL 1, 1983 JHN