REV. "A" - REVERSED LETTERING OF RED & GREEN LEADS

P2

P3

+12.2V

-12V

OUT

-12

+12.2

MUTE

TO PIN 9 IC104 (PC27)

2.8V TO 23.2V

VAR.

OSC. OUT.

N.C.

B

IF

GND

GND

A.G.C.

+4V

ANT.

GND

75 OHM

RF FRONT END

STATION DETECT

IF AMP TIS86 Q202

IF AMP TIS86 Q203

FL201

FL202

FL203

FL204

IC201 HA11225

DET. DISTORTION

MUTE SENS. S200

MUTE FOLLOWER MPS 5172 Q209

STEREO SWITCH MPS 5172 Q207

ST. SW.

AGC MPS 5172 Q205

AGC MPS 5172 Q204

AGC DELAY

AGC + 4.7V

+4.7V

DET. FOLLOWER

IC202 HA12016

CERMET MPX OSC. P200 1K

FL200R

FL200

IC203 LM1458 +8

GREEN

RED

NORMALLY OPEN

RELAY K200

D200 IN4003

MUTE RELAY GATE MPS 5172 Q210

D201 IN4148

RELAY DRIVER MPS A13 Q201

STEREO LED GATE MPS 5172 Q212

AUTO/STEREO S201

STATION DET. MPS A13 Q200

SIG. STRENGTH SW. MPS 5172 Q206

SIG. STRENGTH GATE MPS 5172 Q208

IC200 LM3915N

SS (SIG. STRENGTH) P206 4.7K/5K

MUTE FROM PLL DIGITAL BOARD

MUTE ON/OFF (MANUAL TUNING) S401

J402 75 OHMS

ANT. INPUT

J403 300 OHMS

BALUN T401

J400

L GRN GND BLK

R RED GND BLK

RED OR GRN YL

Q1 2N6076 NP6076

IC1 COP420-LDZ

MEMORY SCAN

MEM. STORE

DOWN

HALT

UP

SCAN

MEM.

CBL1

CBL2

P1

P4

IC2 NSM 4005A

BLACK (STRIPED LEAD)

D3 STEREO L LED

D4 50KHZ L LED

GREEN

RED

INPUT

IC300 TL084CN

Q300 2N5550

Q301 2N5401

Q302 J112

Q303 J112

D300 IN4148

D301 IN4148

D302 IN4148

D303 IN4148

D304 IN5245

D305

S402

DH-330
HAFLER

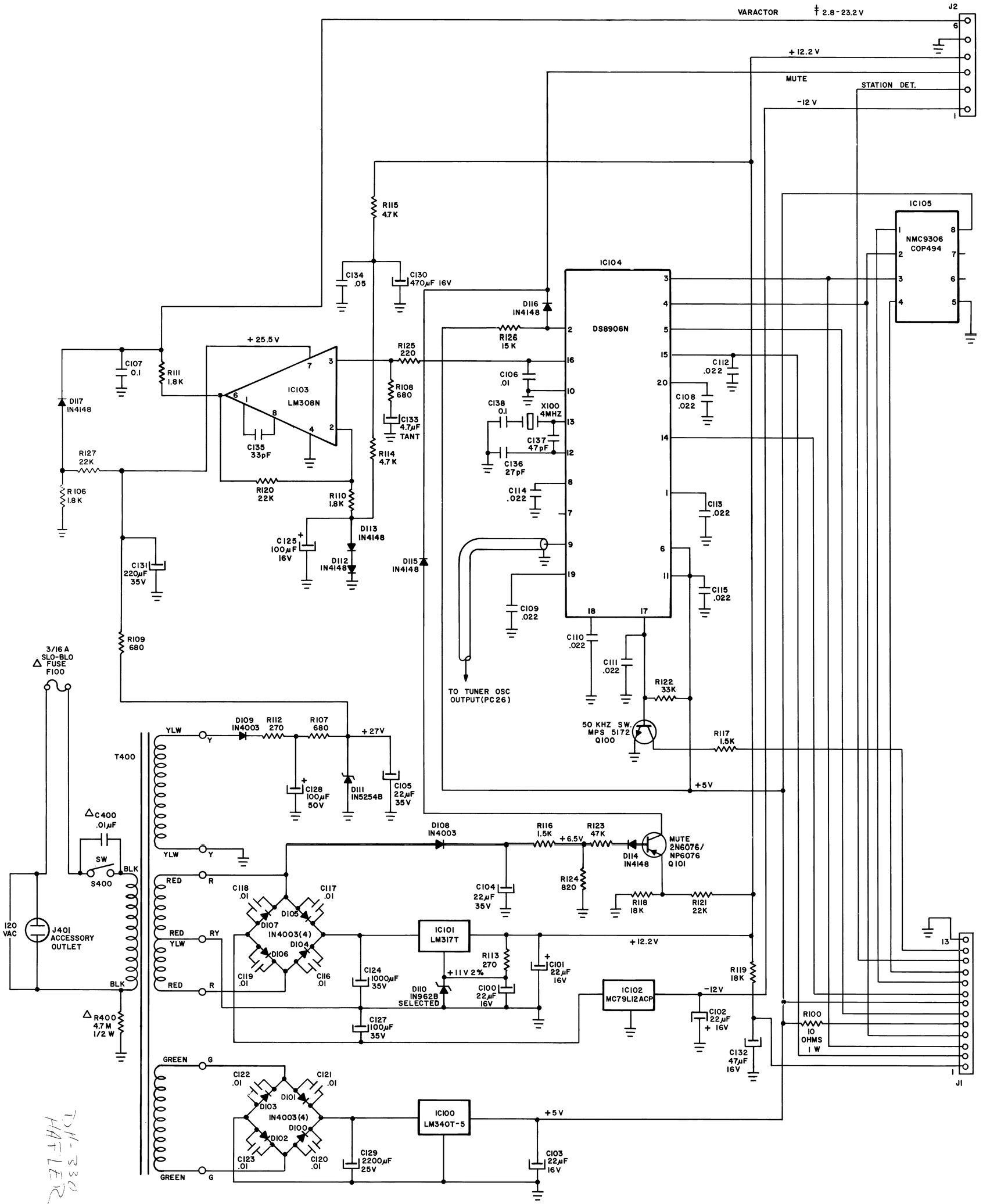

REV. "A" - REMOVED 3C550B BC560B SWITCH. REPLACE WITH VOLTAGE DIVIDER (R127, R106) AND DIODE, 1/4/84.

7 pts (insert overlay as 209 screen

SCHEMATIC DIAGRAM

All

LM 097

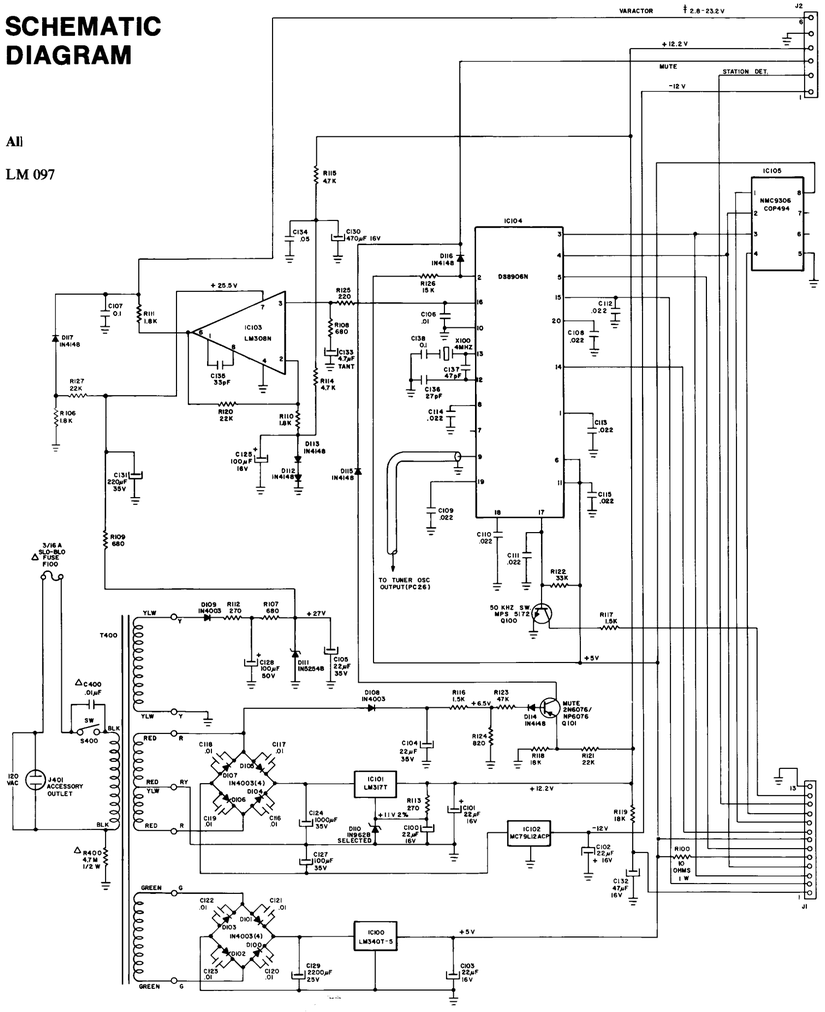

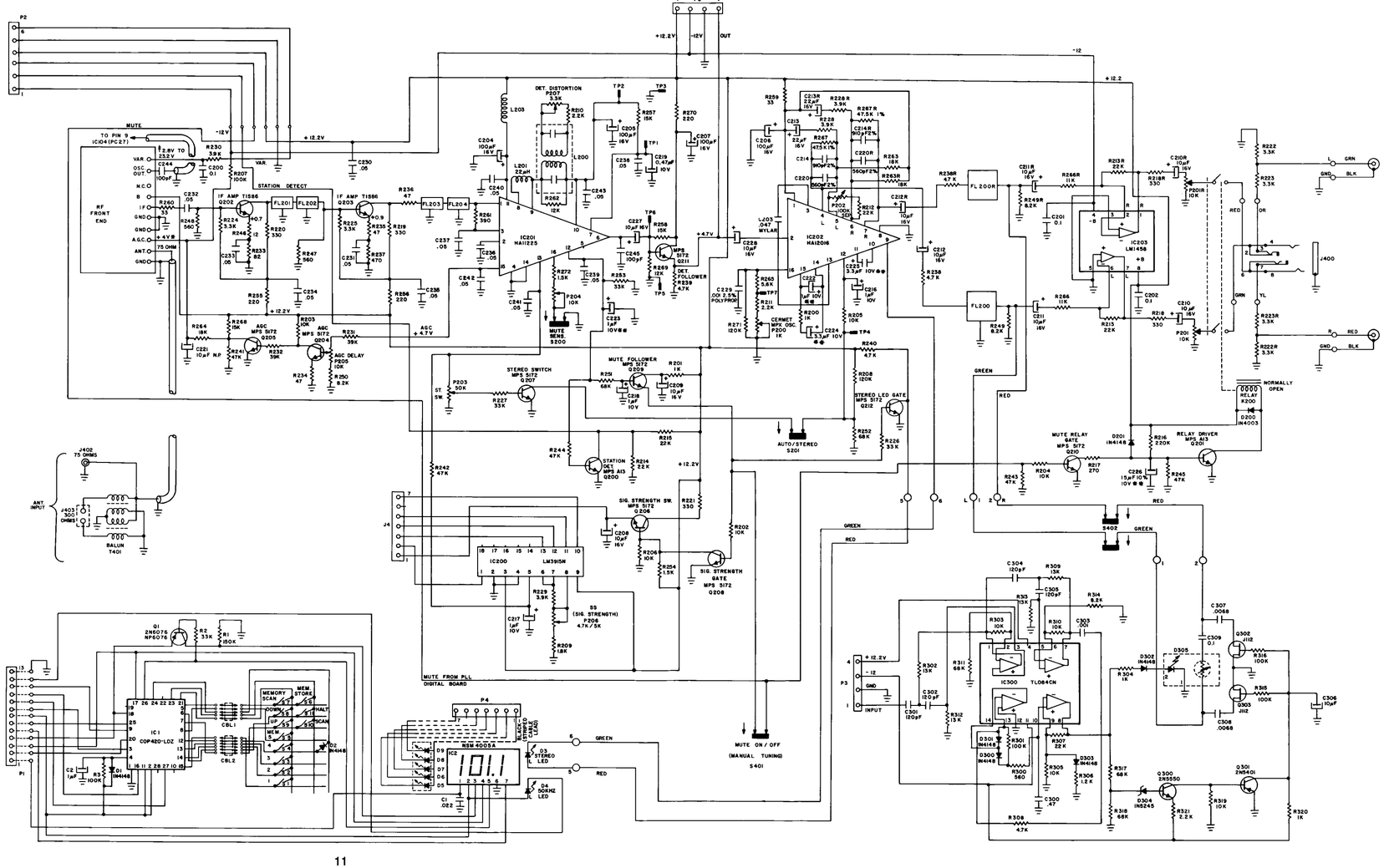

p.10

Short

p.11

p.12

DH-330
HAFLER