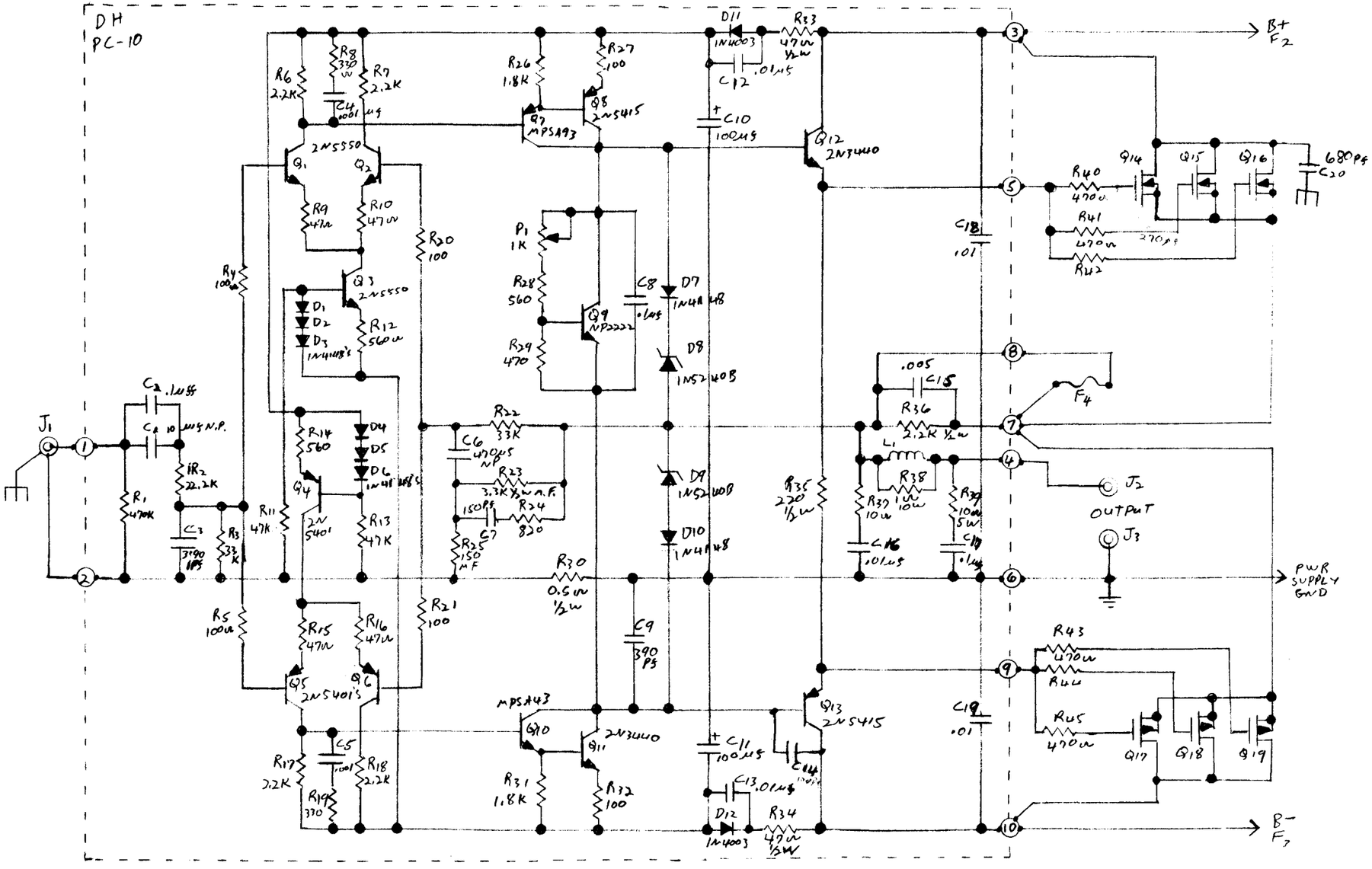


DH-500 AMPLIFIER SCHAMETIC

DRAWN BY H. KLAUS

DATE 12/3/80

REVISED 7/8/81

DAVID HAFLER CO.