NOTES: UNLESS OTHERWISE SPECIFIED

1: ALL RESISTORS ARE OHMS

2: = LOW VOLTAGE GROUND

3: = HIGH VOLTAGE GROUND

4: * = TRANSFORMER TAP
RED FOR SPECTRA 2200
ORANGE FOR SPECTRA 3300

MK-2123
MAGNE-KINETIC INTERFACE FOR SPECTRA 2200/3300

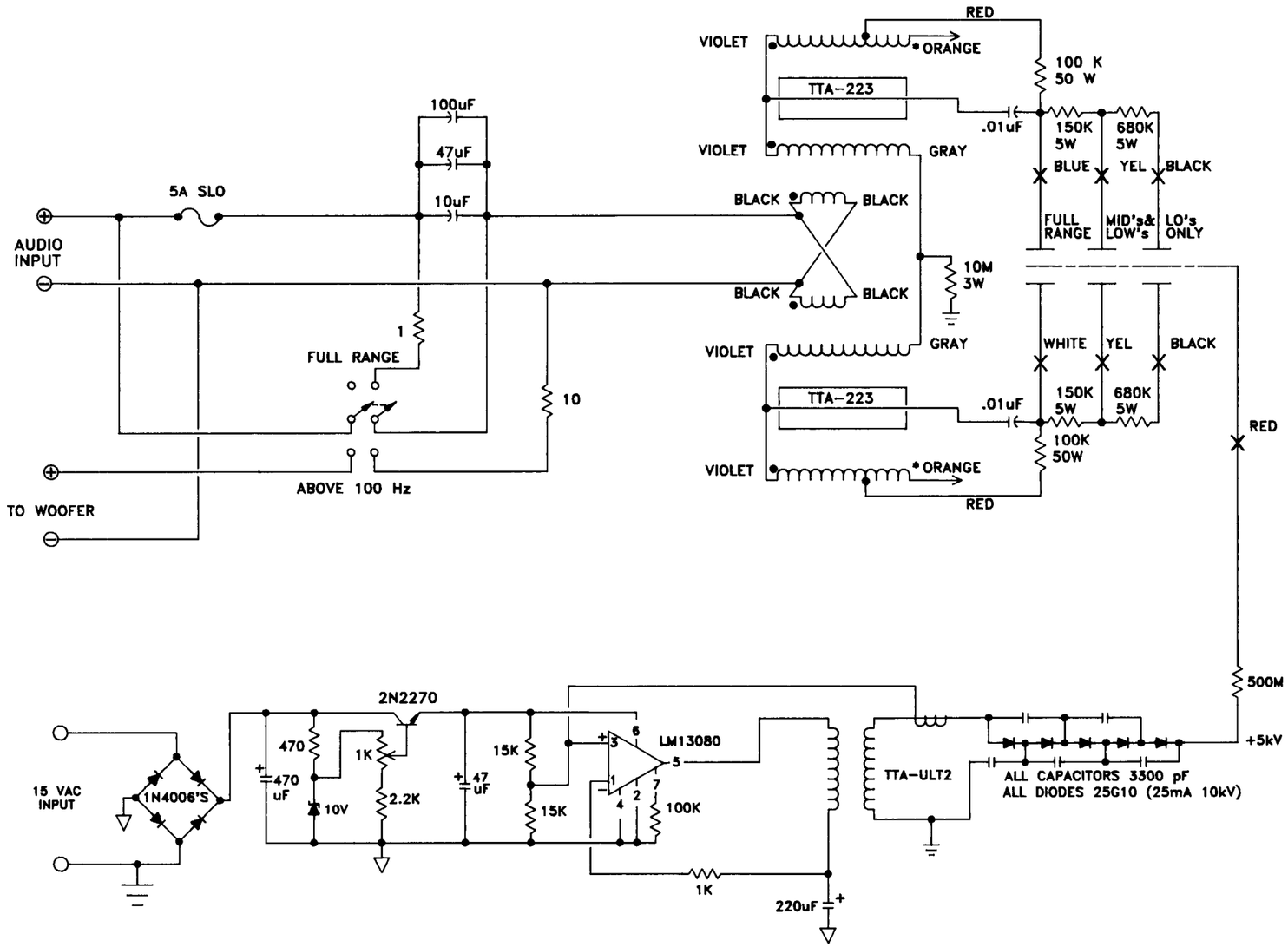

REVISIONS:

1. 5/29/91: UPDATED BIAS SUPPLY

ACOUSTAT
A DIVISION OF ROCKFORD CORP.
TEMPE, AZ., 85281, USA