NOTES: UNLESS OTHERWISE SPECIFIED

1: ALL RESISTORS ARE OHMS

2: ⏚ = LOW VOLTAGE GROUND

3: ⏚ = HIGIH VOLTAGE GROUND

4: * = TRANSIFORMER TAP
GREEN FOR SPECTRA 4400
WHITE FOR SPECTRA 6600
BLUE//YELLOW = SEE OWNERS MANUAL

MK-2146

MAGNE-KINETIC INTERFACE

FOR SPECTRA 4400/6600

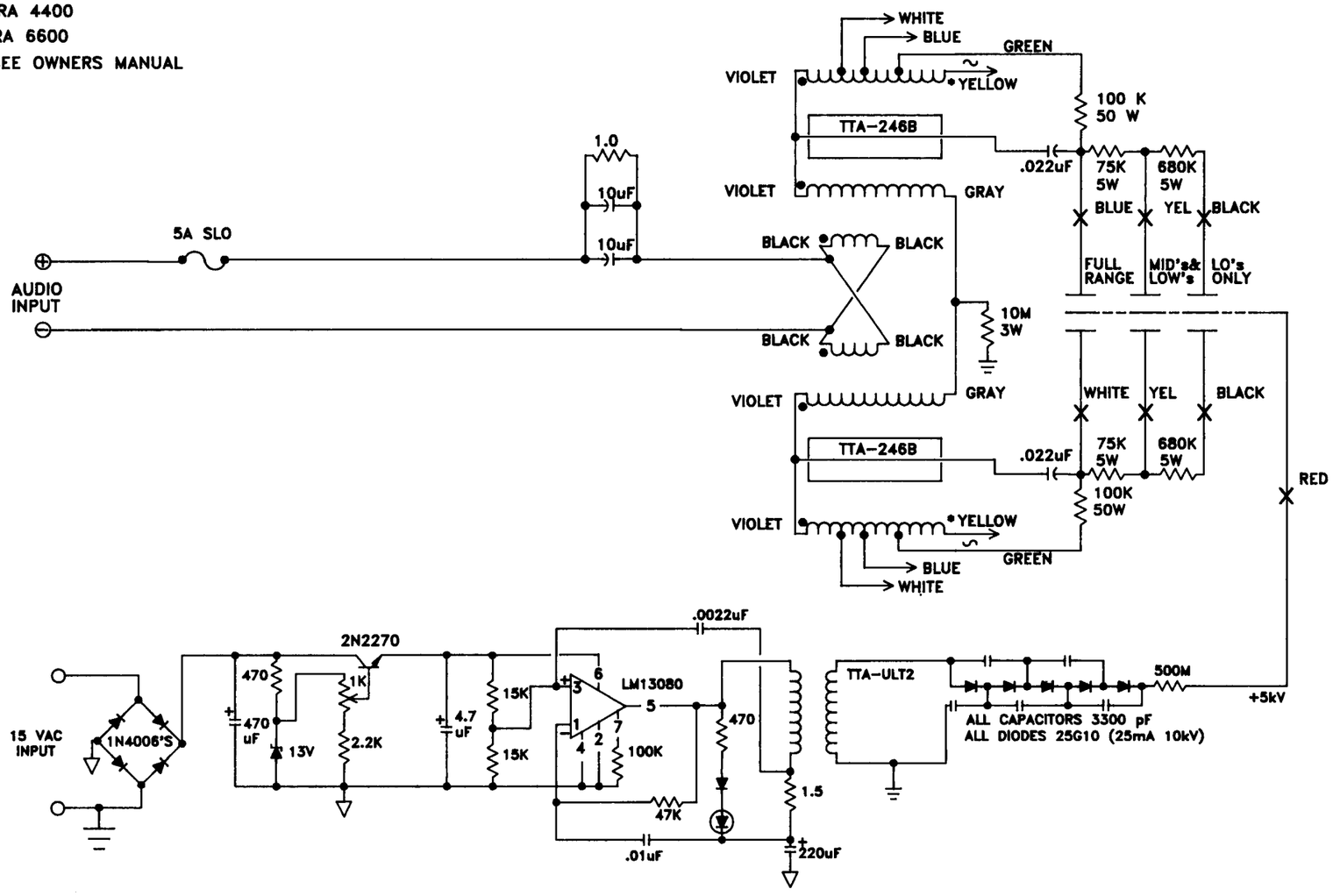

ACOUSTAT

A DIVISION OF ROCKFORD CORP.

TEMPE, AZ. 85281

OLD SUPPLY

NOTES: UNLESS OTHERWISE SPECIFIED

1: ALL RESISTORS ARE OHMS

2: ▽ = LOW VOLTAGE GROUND

3: ⏚ = HIGH VOLTAGE GROUND

4: * = TRANSFORMER TAP
GREEN FOR SPECTRA 4400
WHITE FOR SPECTRA 6600
BLUE/YELLOW = SEE OWNERS MANUAL

MK-2146
MAGNE-KINETIC INTERFACE
FOR SPECTRA 4400/6600

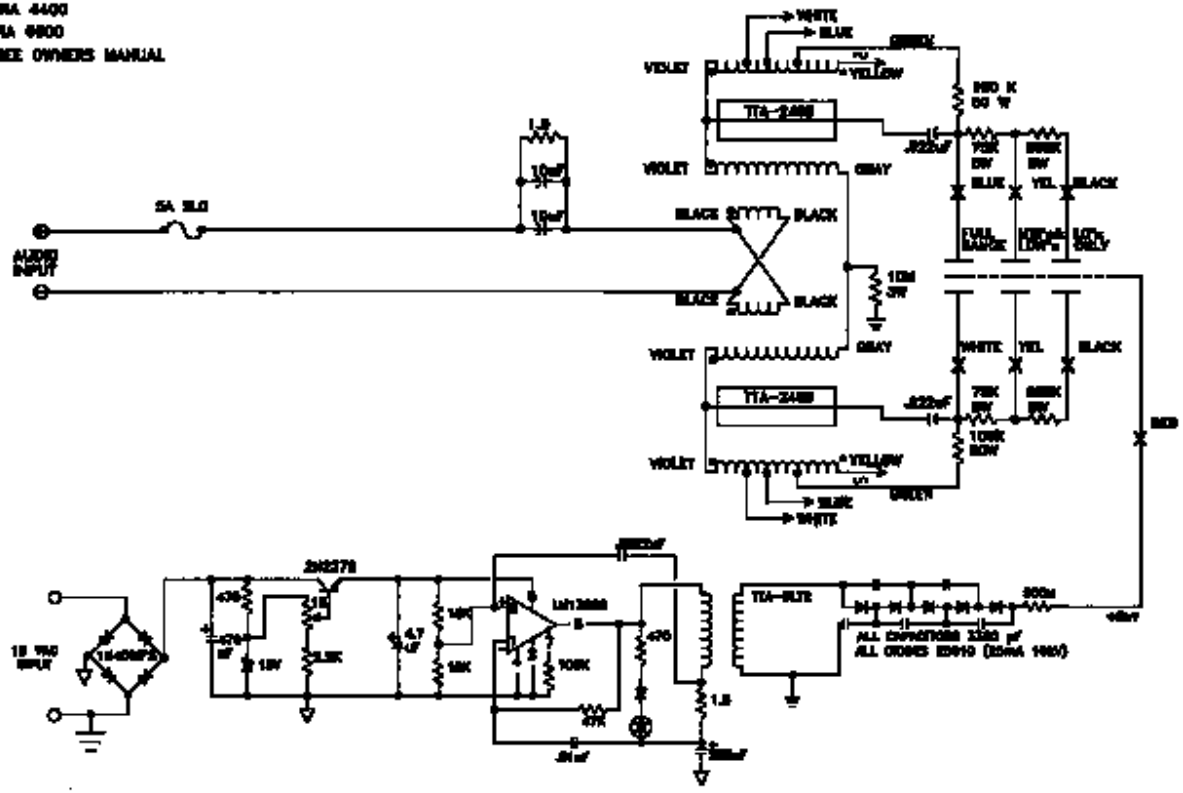

ACOUSTAT
A DIVISION OF ROCKFORD CORP.
TEMPE, AZ. 85281

OLD SUPPLY