NOTES: UNLESS OTHERWISE SPECIFIED

1: ALL RESISTORS ARE OHMS

2: = LOW VOLTAGE GROUND

3: = HIGH VOLTAGE GROUND

4: ** = TRANSFORMER TAP
GREEN FOR SPECTRA 4400
WHITE FOR SPECTRA 6600
BLUE/YELLOW = SEE OWNERS MANUAL

MK-2146
MAGNE-KINETIC INTERFACE FOR SPECTRA 4400/6600

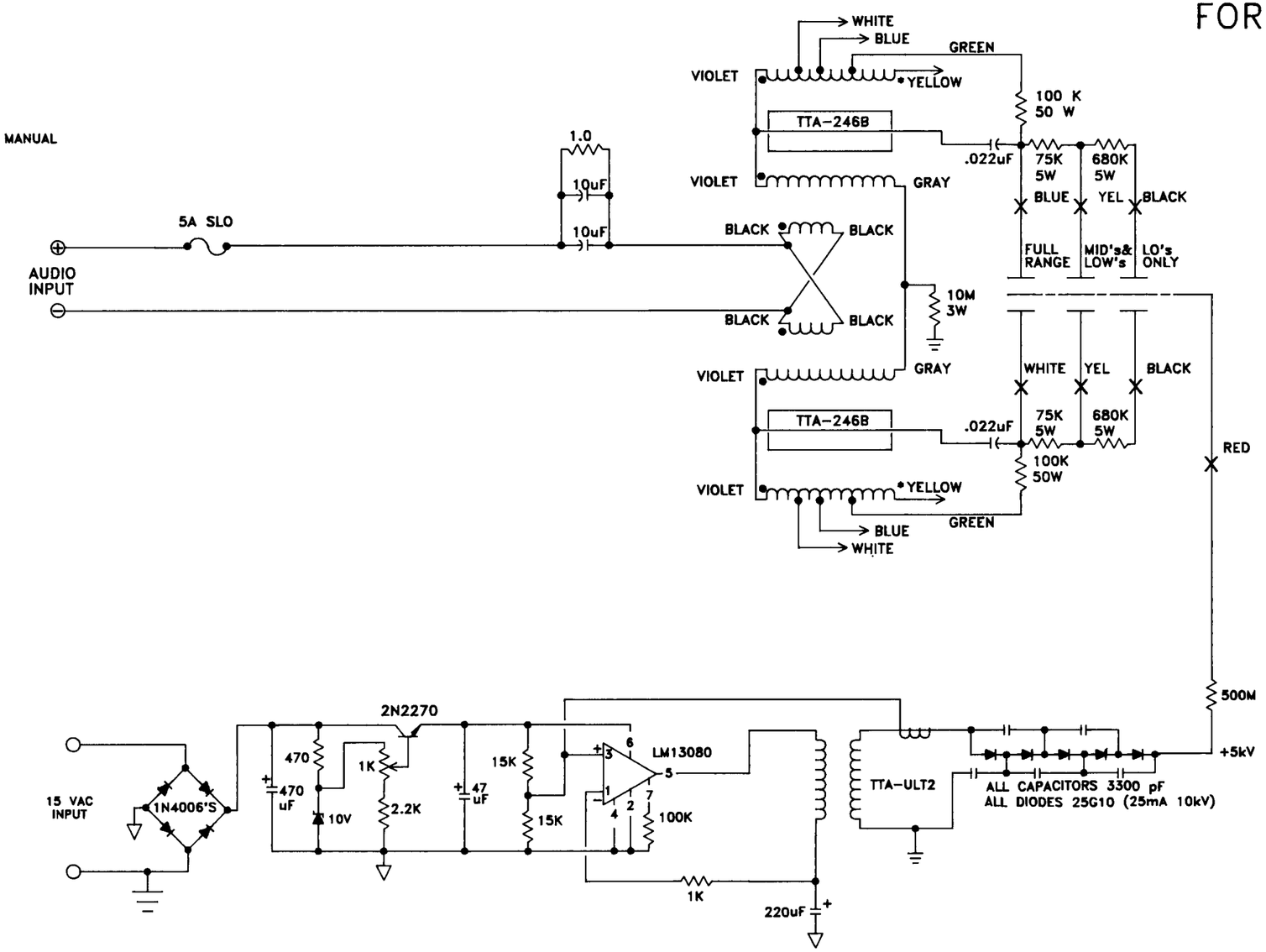

REVISIONS:

1. 5/29/91: UPDATED BIAS SUPPLY

ACOUSTAT
A DIVISION OF ROCKFORD CORP.
TEMPE, AZ., 85281, USA