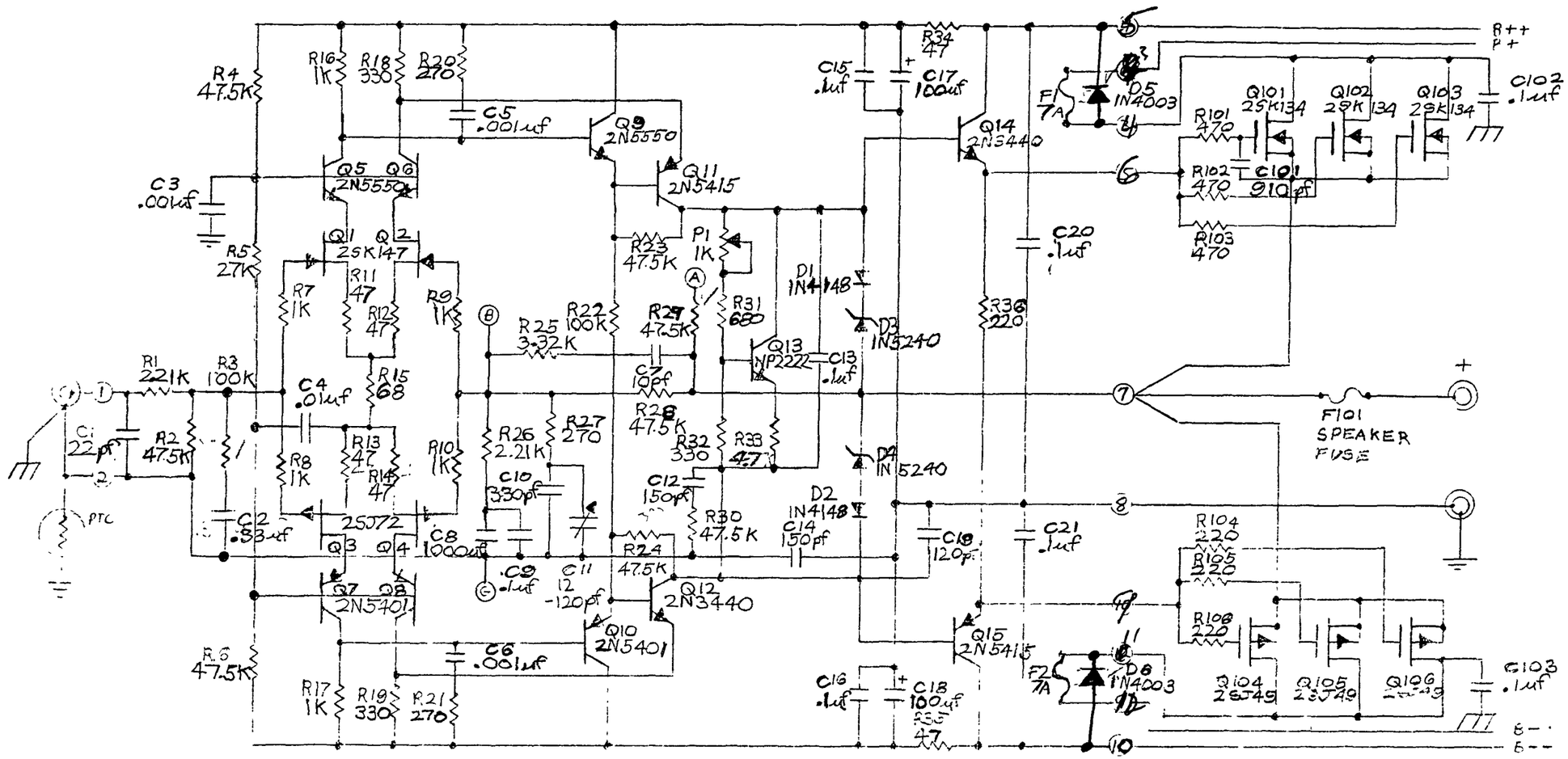

C12+R30 Rev.

REVISION NO.	DATE	THE david hafler COMPANY
		PC-40D
PART NO. PC40DSCH	DRAWN BY	SCALE
	DATE	APPROVED
MATERIAL/FINISH	SCH-SE120	

XS280