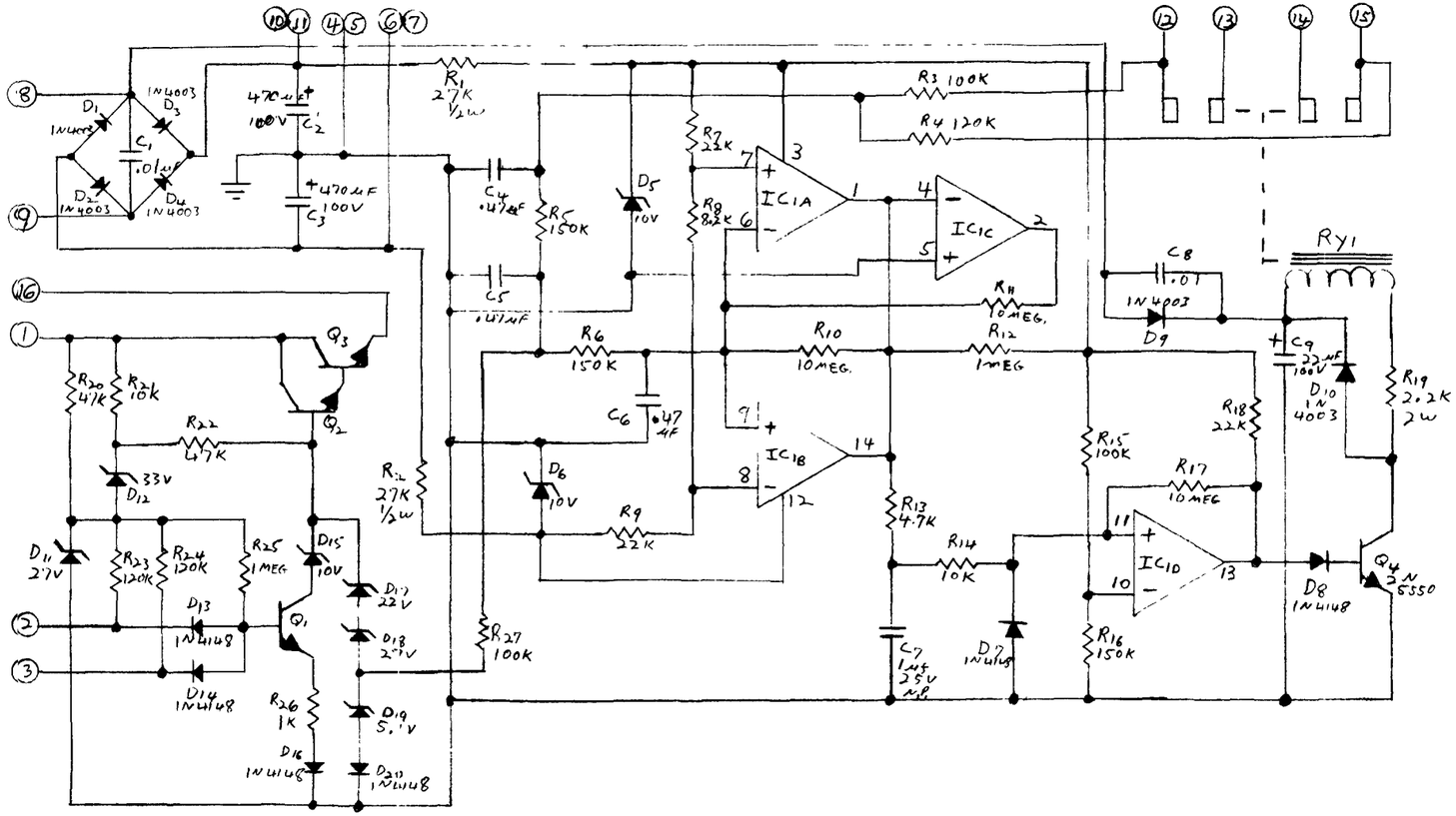

REVISION NO.	DATE	THE david hafler COMPANY
		PC-43B
PART NO. PC43BSCH	DRAWN BY H KLAUS	SCALE
	DATE 6/12/87	APPROVED
MATERIAL / FINISH		