# KENWOOD

## 4 CHANNEL STEREO RECEIVER

# KR-6140A

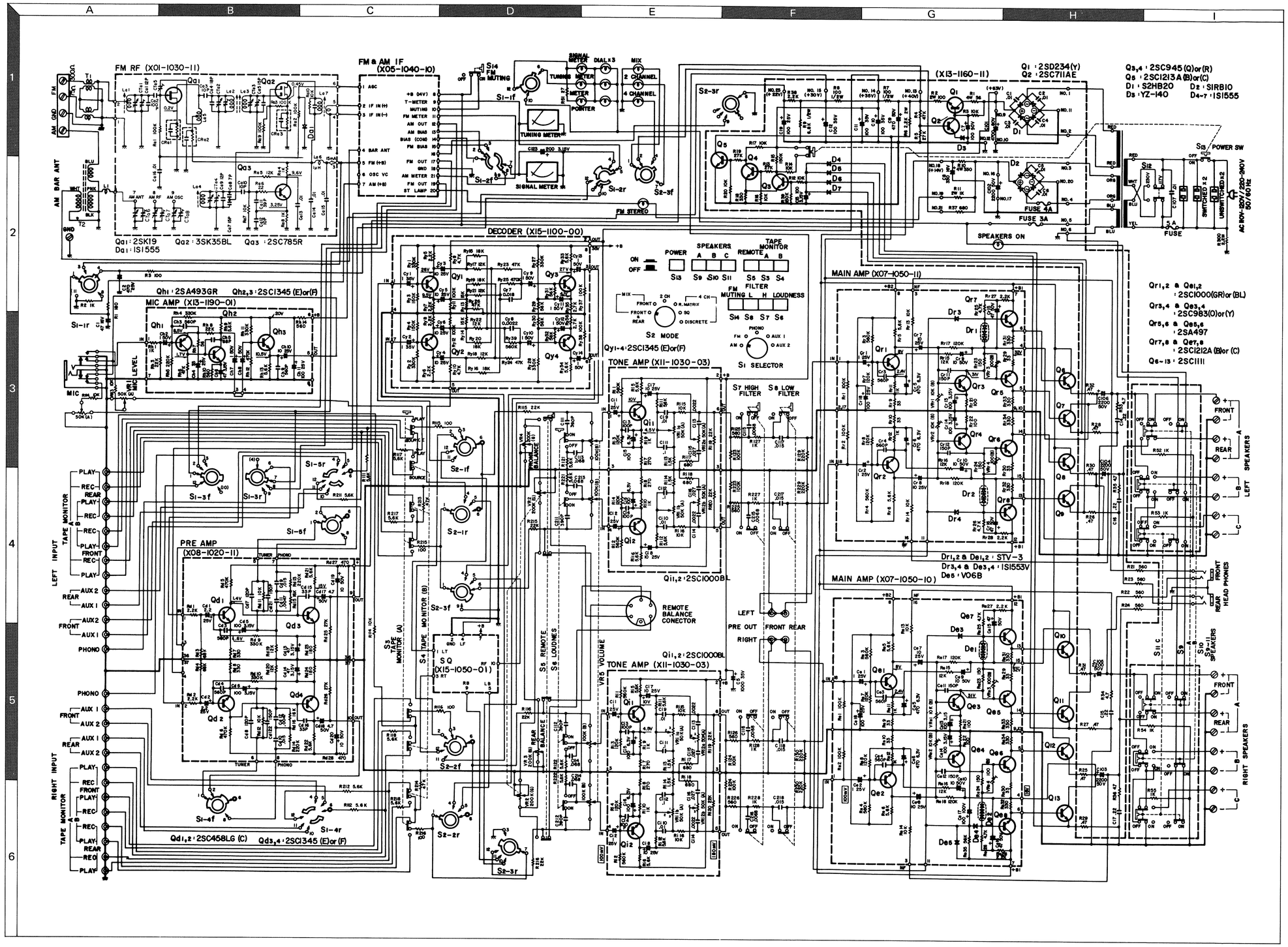

## SPECIFICATIONS

### FM TUNER SECTION

| | | |
|---|---|---|
| Antenna Impedance | 300 ohms Balanced & 75 ohms Unbalanced. | |
| Usable Sensitivity (IHF) | 1.9 μV | |
| Quieting Slope | 50 dB at 5 μV, 55 dB at 10 μV, 60 dB at 50 μV. | |
| Frequency Response | 30 Hz to 15 kHz, +0 dB, −3.0 dB | |
| Harmonic Distortion | MONO | Less than 0.5% |
| | STEREO | Less than 0.8% |
| Signal to Noise Ratio | Better than 60 dB | |
| Capture Ratio | 2.5 dB | |
| Selectivity (IHF) (Alt Channel) | Better than 50 dB | |
| Image Rejection | Better than 65 dB | |
| IF Rejection | Better than 90 dB | |
| Spurious Signal Rejection | Better than 100 dB | |
| A. M Suppression | Better than 55 dB | |
| Stereo Separation | Better than 30 dB at 1 kHz | |
| | Better than 20 dB at 10 kHz | |
| Sub Carrier Suppression | Better than 40 dB | |

### AM TUNER SECTION

| | |
|---|---|
| Antenna | Built-in ferrite antenna, External antenna terminals |
| Usable Sensitivity (IHF) | 20 μV |
| Signal to Noise Ratio | Better than 45 dB at 1mV input |
| Selectivity (IHF) | Better than 25 dB |
| Image Rejection | Better than 45 dB |
| I. F. Rejection | Better than 32 dB |

### AUDIO SECTION

| | | |
|---|---|---|
| IHF. Dynamic Power | 320 watts 4 ohm Loads, 200 watts 8 ohm Loads | |
| RMS Output Power | 4 channel operating into 4 ohms at 1 kHz, 50 watts x 4 | |
| | 4 channel operating into 8 ohms at 1 kHz, 30 watts x 4 | |
| Harmonic Distortion | Less than 0.5% at rated output from 30 Hz to 20 kHz | |
| | Less than 0.1% at −3 dB rated output from 1 kHz | |
| Intermodulation Distortion | Less than 0.2% at −3 dB rated output 8 ohms/2ch | |
| Frequency Response | 15 Hz to 40 kHz ±1 dB | |
| Power Bandwidth (IHF) | 20 Hz to 30 kHz | |
| Input Sensitivity, Input Impedance | | |
| Phono | 2.5mV | 50 K ohms |
| Mic | 1.2mV | 10 K ohms |
| Aux 1 & 2 | 200mV | 20 K ohms |
| Tape Play A | 150mV | 20 K ohms |
| Tape Play B | 120mV | 20 K ohms |
| Recording Output | | |
| Tape Rec | 150mV | |
| Din Connector | 30mV | |
| Signal to Noise Ratio | | |
| Phono | 65 dB | |
| Mic | 50 dB | |
| Aux 1 & 2 | 75 dB | |
| Tape Play A & B | 75 dB | |
| Damping Factor | 50 at 8 ohm Loads | |
| Speaker Impedance | Accepts 4 ohm to 16 ohm Loads | |
| Bass Control | ±10 dB at 100 Hz | |
| Treble Control | ±10 dB at 10 kHz | |
| Low Filter | −6 dB at 100 Hz | |
| High Filter | −9 dB at 10 kHz | |
| Loudness Control (−30 dB) | +10 dB at 100 Hz, +5 dB at 10 kHz | |

### GENARAL

| | | |
|---|---|---|
| Switch | SPEAKER | A Switch, B Switch, C Switch |
| | SELECTOR | AM–FM–PHONO–AUX1–AUX2 |
| | MODE | FRONT & REAR–FRONT–2CH–R·MATRIX–SQ–DISCRETE (MIX) (4CH) |
| | Other | Tape Monitor A, Tape Monitor B, FM Muting, Low Filter, High Filter, Loudness Remote Control (RC-44) |
| AC Outlets | | 2 Switched & Unswitched |
| Power Consumption | | 400 watts at full power, 50 watts at no signal |
| Dimensions | | 17-5/16 W, 6-29/32 H, 14-9/16 D |

KR-6140A KR-6140A

FM & AM-IF (X05-1040-10)

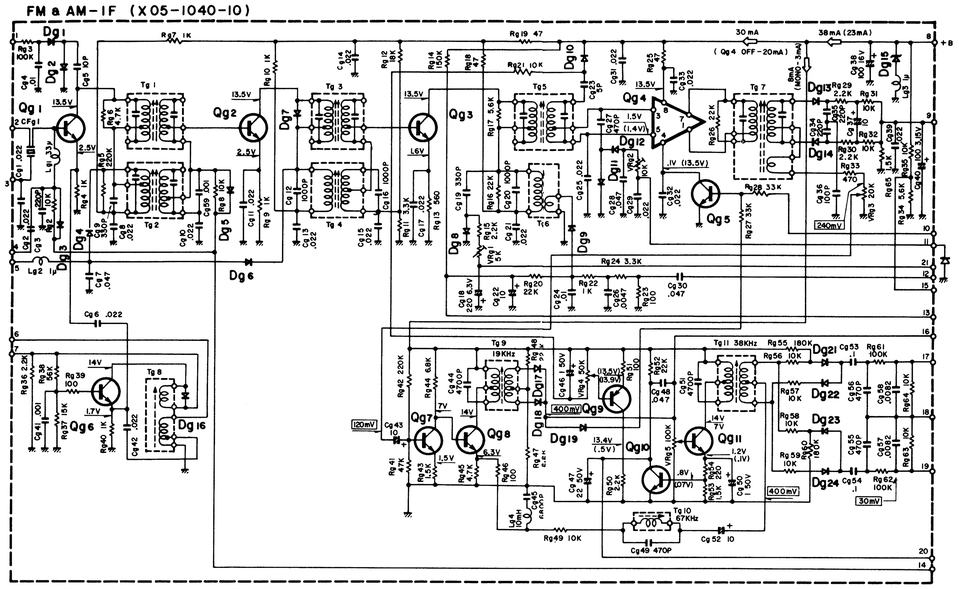

Qg1~3 : 2SC381 (R), Qg4 : μPC555A (R)or(B), Qg5 : 2SC945(Q)or(R), Qg6 : 2SC941(R)or(O), Qg7,8 : 2SC458 (B)or(C), Qg9 : 2SA733(Q)or(R)
Qg10 : 2SC711A (E)or(F), Qg11 : 2SC458 (C),
Dg1~3,5,8~14,16~18,21~24 : 1N60, Dg4,6,7,19,20 : 1S1555, Dg15 : DZ-140

SQ (X15-1050-00)

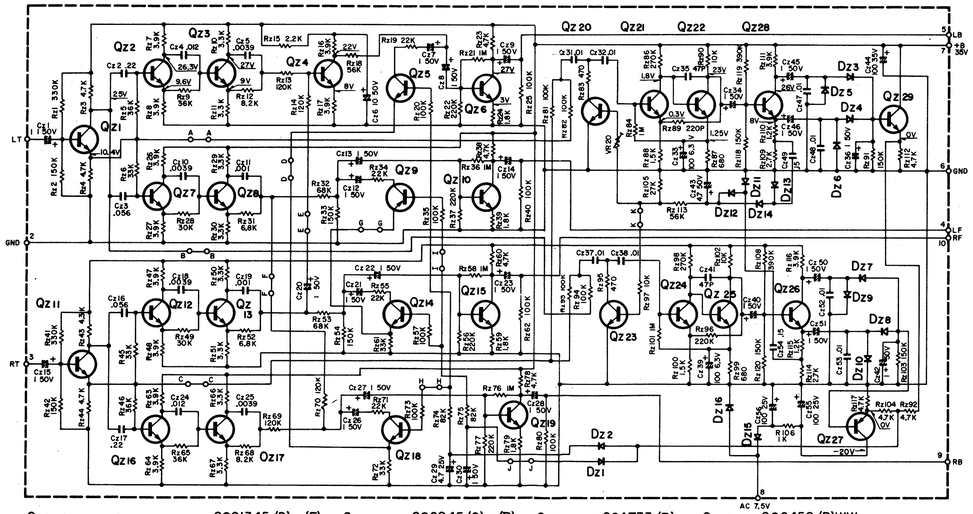

Qz1~4,6~8,10~13,15~17,19 : 2SC1345 (D)or(E), Qz5,18,29 : 2SC945 (Q)or(R), Qz9,14,27 : 2SA733 (R), Qz20,23 : 2SC458 (B)WW
Qz21,22,24,25,26,28 : 2SC1345 (E),
Dz1~16 : 1S1555 or 1S2076