KENWOOD

COMPUTERIZED HIGH SPEED STEREO RECEIVER

KR-810

2SC1675
2SC1841
JA101(P)
JC501(P)

2SD330

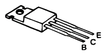

AN6552
μPB553AC

HA11225

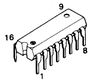

μPC1235C

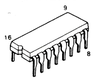

STK-460A

LA1245

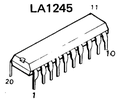

μPD1703C-018

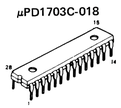

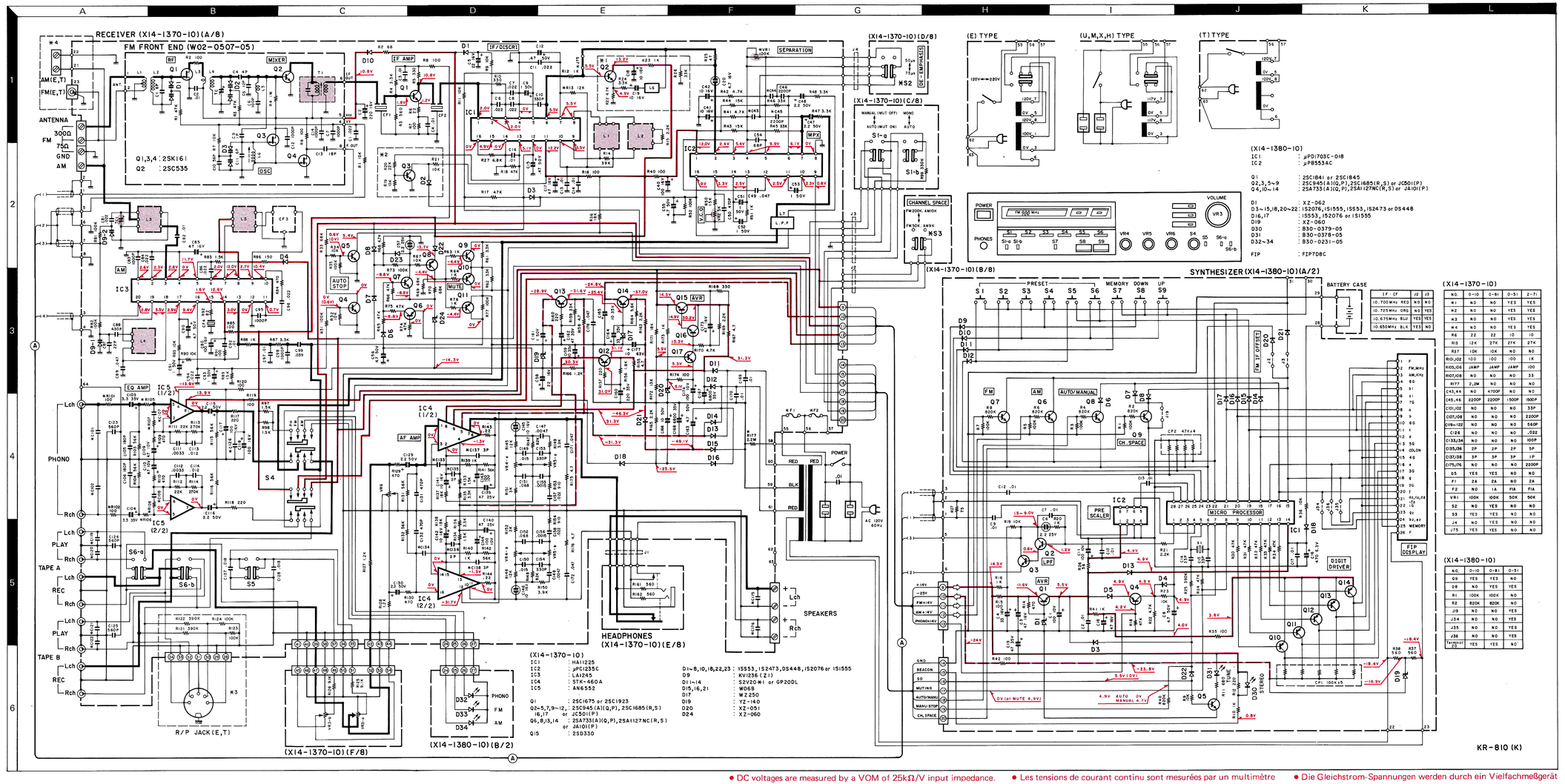

SPECIFICATIONS

Audio section

Power Output
23 watts* per channel minimum RMS, both channel driven at 8 ohms from 20 Hz to 20,000 Hz with no more than 0.07% total harmonic distortion.

Total Harmonic Distortion
(20 Hz to 20,000 Hz from TAPE)
rated power into 8 ohms 0.07%
1 watt power into 8 ohms 0.03%

Intermodulation Distortion
(60 Hz:7 kHz=4:1 SMPTE)
rated power into 8 ohms 0.07%

Slew Rate ..... ±40 V/μsec
Rise Time ..... 3 μsec
Damping Factor (at 8 ohms 1 kHz) 50

Input Sensitivity/Impedance
PHONO ..... 2.5 mV/50 k ohms
TAPE ..... 150 mV/50 k ohms

Signal to Noise Ratio (A weighted)
PHONO ..... 72 dB for 2.5 mV input
78 dB for 5.0 mV input
TAPE ..... 100 dB for 150 mV input

Maximum PHONO Input Level at 1,000 Hz ..... 150 mV (rms), THD 0.07%

Frequency Response
PHONO RIAA Standard Curve ..... 20 Hz to 20,000 Hz ±0.3 dB
TAPE ..... 5 Hz to 100 kHz −3 dB

Tone Control
Bass ..... ±8 dB at 100 Hz
Treble ..... ±8 dB at 10 kHz

Loudness Control (VOL. −30 dB) ..... +10 dB at 100 Hz

Output Level/Impedance
TAPE REC Out (Pin) ..... 150 mV/1 k ohms

FM tuner section
Usable Sensitivity ..... 10.8 dBf (1.9 μV)
50 dB Quieting Sensitivity
Mono ..... 17.3 dBf (4.0 μV)
Stereo ..... 37.5 dBf (40.0 μV)
Signal to Noise Ratio at 65 dBf
Mono ..... 75 dB
Stereo ..... 71 dB
Total Harmonic Distortion at 1,000 Hz
Mono 0.1%
Stereo 0.15%
Frequency Response ..... 30 Hz to 15,000 Hz, +0.5 dB, −2.0 dB
Capture Ratio ..... 1 dB
Image Rejection Ratio ..... 45 dB
Spurious Response Ratio ..... 85 dB
IF Reponse Ratio ..... 95 dB
Alternate Channel Selectivity ..... 50 dB at 400 kHz
AM Suppression Ratio ..... 50 dB
Stereo Separation Ratio
at 1,000 Hz ..... 45 dB
at 50 Hz to 10,000 Hz ..... 3.3 dB
Subcarrier Product Ratio ..... 53 dB
Antenna Impedance ..... 300 ohms balanced & 75 ohms unbalanced
FM Frequency Range ..... 88 MHz to 108 MHz

AM tuner section
Usable Sensitivity ..... 10 μV
Signal to Noise Ratio ..... 50 dB
Image Rejection ..... 40 dB
Selectivity ..... 30 dB

GENERAL
Power Consumption ..... 1.6 A
18 watts at no signal
AC Outlet ..... Switched x 1
Unswitched x 1
Dimensions ..... W440 mm (17-5/16")
H 108 mm (4-1/4")
D 245 mm (9-41/64")
Net Weight ..... 4.5 kg (10.6 lb)
Gross Weight ..... 5.4 kg (11.9 lb)

* Measured pursuant to Federal Trade Commission's Trade Regulation rule on Power Output Claims for Amplifier in U.S.A.

Kenwood follows a policy of continuous advancements in development. For this reason specifications may be changed without notice.

Kenwood poursuit une politique de progrès constants en ce qui concerne le développement. Pour cette raison, les spécifications sont suettes à modifications sans préavis.

Kenwood strebt ständige Verbesserungen in der Entwicklung an. Daher bleiben Änderungen der technischen Daten jederzeit vorbehalten.

● DC voltages are measured by a VOM of 25kΩ/V input impedance.

● Les tensions de courant continu sont mesurées par un multimètre d'une impédance d'entrée de 25kΩ/V.

● Die Gleichstrom-Spannungen werden durch ein Vielfachmeßgerät von 25kΩ/V Eingangs-Impedanz gemessen.