KENWOOD

AUTO REVERSE STEREO TAPE DECK

KW-4077 ①

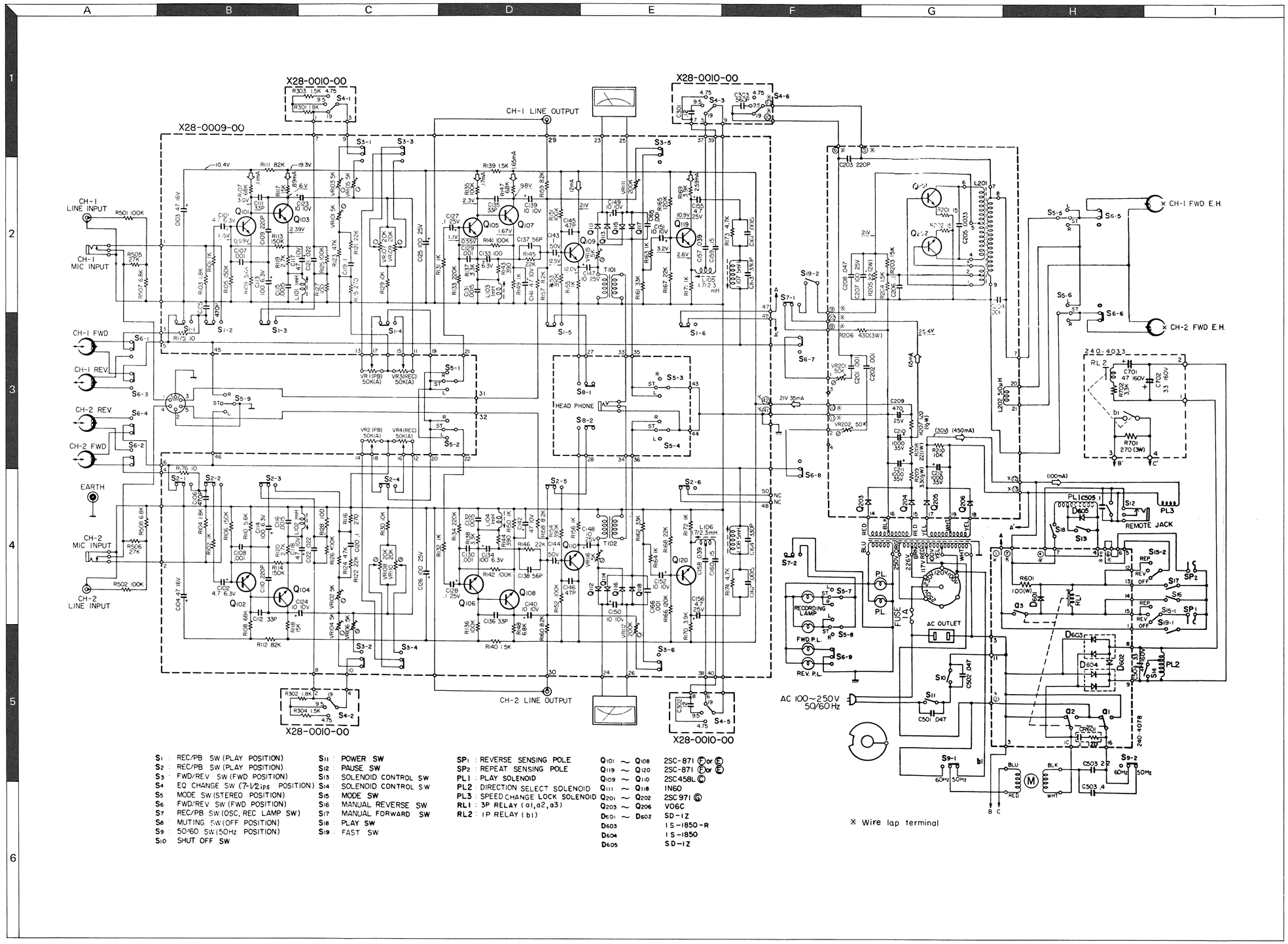

S1 : REC/PB SW (PLAY POSITION)	S11 : POWER SW	SP1 : REVERSE SENSING POLE	Q101 ~ Q108 2SC-871 (F) or (E)
S2 : REC/PB SW (PLAY POSITION)	S12 : PAUSE SW	SP2 : REPEAT SENSING POLE	Q119 ~ Q120 2SC-871 (F) or (E)
S3 : FWD/REV SW (FWD POSITION)	S13 : SOLENOID CONTROL SW	PL1 : PLAY SOLENOID	Q109 ~ Q110 2SC458L (C)
S4 : EQ CHANGE SW (7-1/2ips POSITION)	S14 : SOLENOID CONTROL SW	PL2 : DIRECTION SELECT SOLENOID	Q111 ~ Q118 1N60
S5 : MODE SW (STEREO POSITION)	S15 : MODE SW	PL3 : SPEED CHANGE LOCK SOLENOID	Q201 ~ Q202 2SC 971 (G)
S6 : FWD/REV SW (FWD POSITION)	S16 : MANUAL REVERSE SW	RL1 : 3P RELAY (a1,a2,a3)	Q203 ~ Q206 V06C
S7 : REC/PB SW (OSC, REC LAMP SW)	S17 : MANUAL FORWARD SW	RL2 : 1P RELAY (b1)	D601 ~ D602 SD-1Z
S8 : MUTING SW (OFF POSITION)	S18 : PLAY SW		D603 1S-1850-R
S9 : 50/60 SW (50Hz POSITION)	S19 : FAST SW		D604 1S-1850
S10 : SHUT OFF SW			D605 SD-1Z

SPECIFICATIONS

NUMBER OF HEADS:
3 Heads: Forward Erase, Forward Record-Playback, Reverse Playback
4-Track Stereo or Mono

RECORD/PLAYBACK SYSTEM:
4-Track STEREO/MONO Recording and Playback, Permits Auto-Reverse Playback and Auto-Repeat Playback

TAPE SPEEDS:
7-1/2, 3-3/4, 1-7/8 ips

REEL SIZE:
Standard NAB 7" Maximum.

FREQUENCY RESPONSE:
20 ~ 20,000 Hz at 7-1/2 ips
30 ~ 15,000 Hz at 3-3/4 ips
30 ~ 8,000 Hz at 1-7/8 ips

SIGNAL TO NOISE RATIO:
Better than 50dB at 7-1/2 ips

HARMONIC DISTORTION (PRE-AMP):
Less than 0.5% at 0dBs (0.775V)

WOW AND FLUTTER:
Less than 0.12% at 7-1/2 ips
Less than 0.18% at 3-3/4 ips
Less than 0.25% at 1-7/8 ips

RECORDING TIME: (with 1,800 feet tape)
1 hr. 30 min. at 7-1/2 ips
3 hrs. at 3-3/4 ips
6 hrs. at 1-7/8 ips

FAST WIND/REWIND TIME:
Within 260 sec. with 1,200 feet tape

LEVEL INDICATION:
Two VU Meters
Record; Standard Recording Level at 0VU
Playback; 0dBs Line Output at 0VU

INPUTS:
2 Microphone Input Jacks
Sensitivity; −70dBs (0.25mV)
Input Impedance; 2kΩ
(Optimum Microphone 600Ω)
2 Line Input Jacks
Sensitivity; −18dBs (100mV)
Input Impedance; 100kΩ

OUTPUTS:
2 Line Output Jacks
Output Level; 0dBs (0.775V)
Head Phone Jack
Output Level; −28dBs (30mV)
Impedance; 8Ω

DIN CONNECTOR:
Input Side
Sensitivity; −36dBs (12.5mV)
Output Side
Output Level; 0dBs (0.775V)

EQUALIZER:
NAB Standard

SEMICONDUCTORS:
14 Transistors and 17 Diodes

OPERATING POSITION:
Horizontal or Vertical

OTHER SPECIAL FEATURES:
Solenoid Action Micro Touch Direction Controls
Automatic Pinch Roller OFF
Automatic Recording Start with Timer
Automatic Power Switch OFF
Remote Control Jack for Pause Control
2-Luminous VU Meters
Four-Digit Automatic Counter with Reset Button

DIMENSIONS:
16-5/16" (W) x 17-3/8" (H) x 7-7/8" (D)

WEIGHT:
26.5 lbs.

POWER REQUIREMENTS:
100 – 120 – 230 – 250V, 50 watts

SUPPLIED ACCESSORIES:
Extra 7" Reel
2 Connecting Cords
2 Reel Caps.
2 Reel Adjusting Discs

OPTIONAL ACCESSORIES:
Remote-Controller RC-75
Plastic Dust Cover SR-23

KW-4077 KW-4077

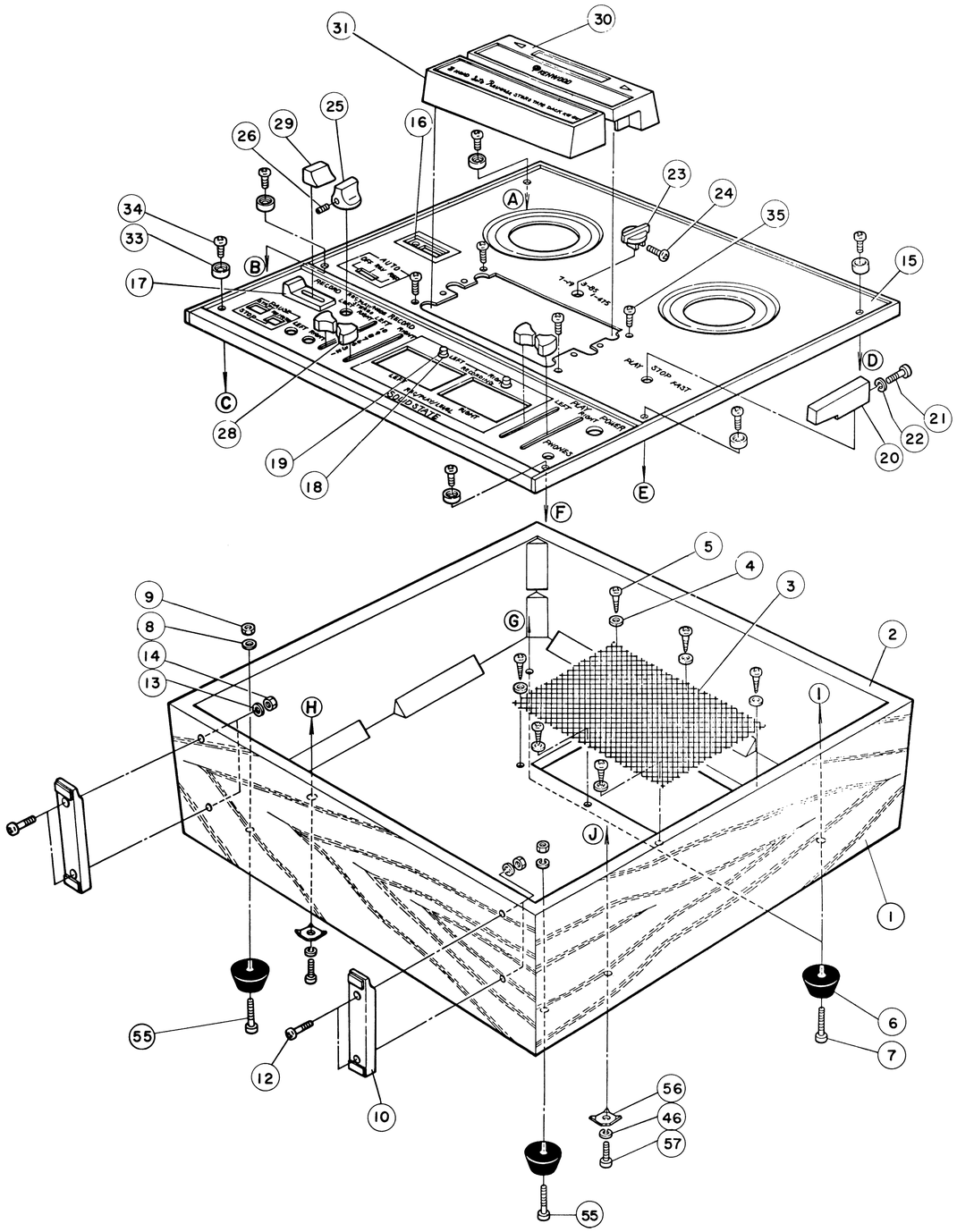

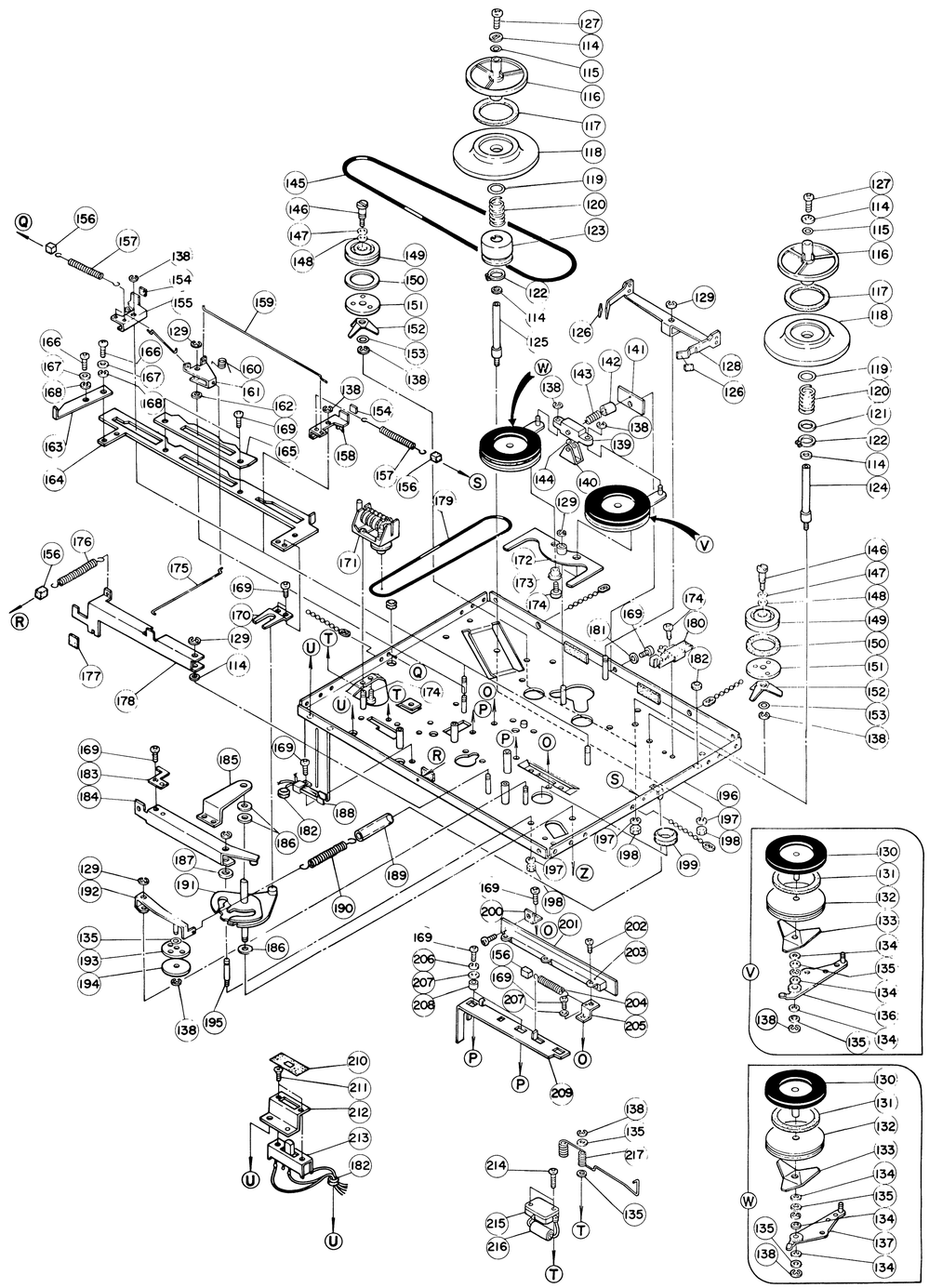

74 74

KENWOOD

AUTO REVERSE STEREO TAPE DECK

KW-4077

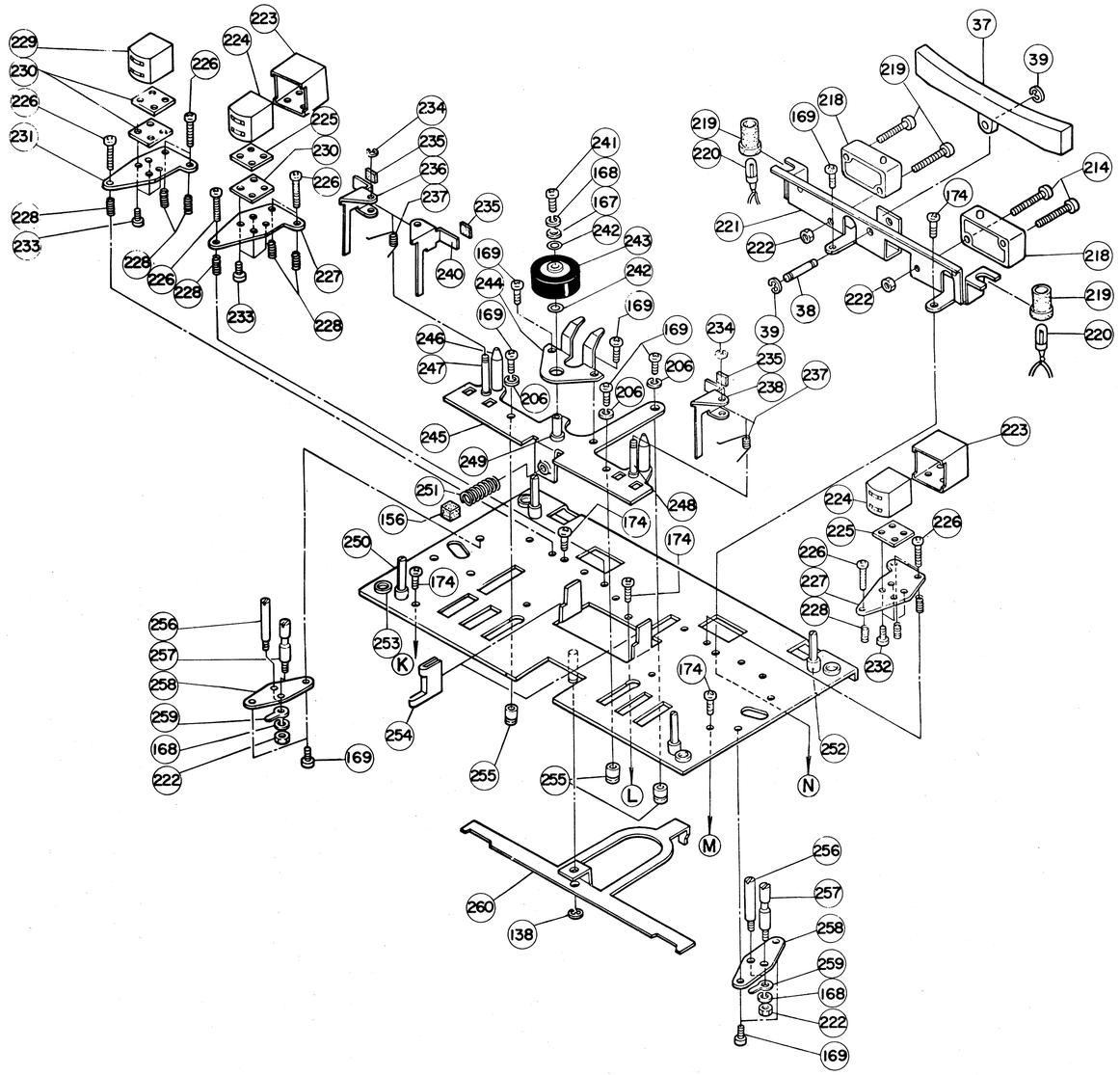

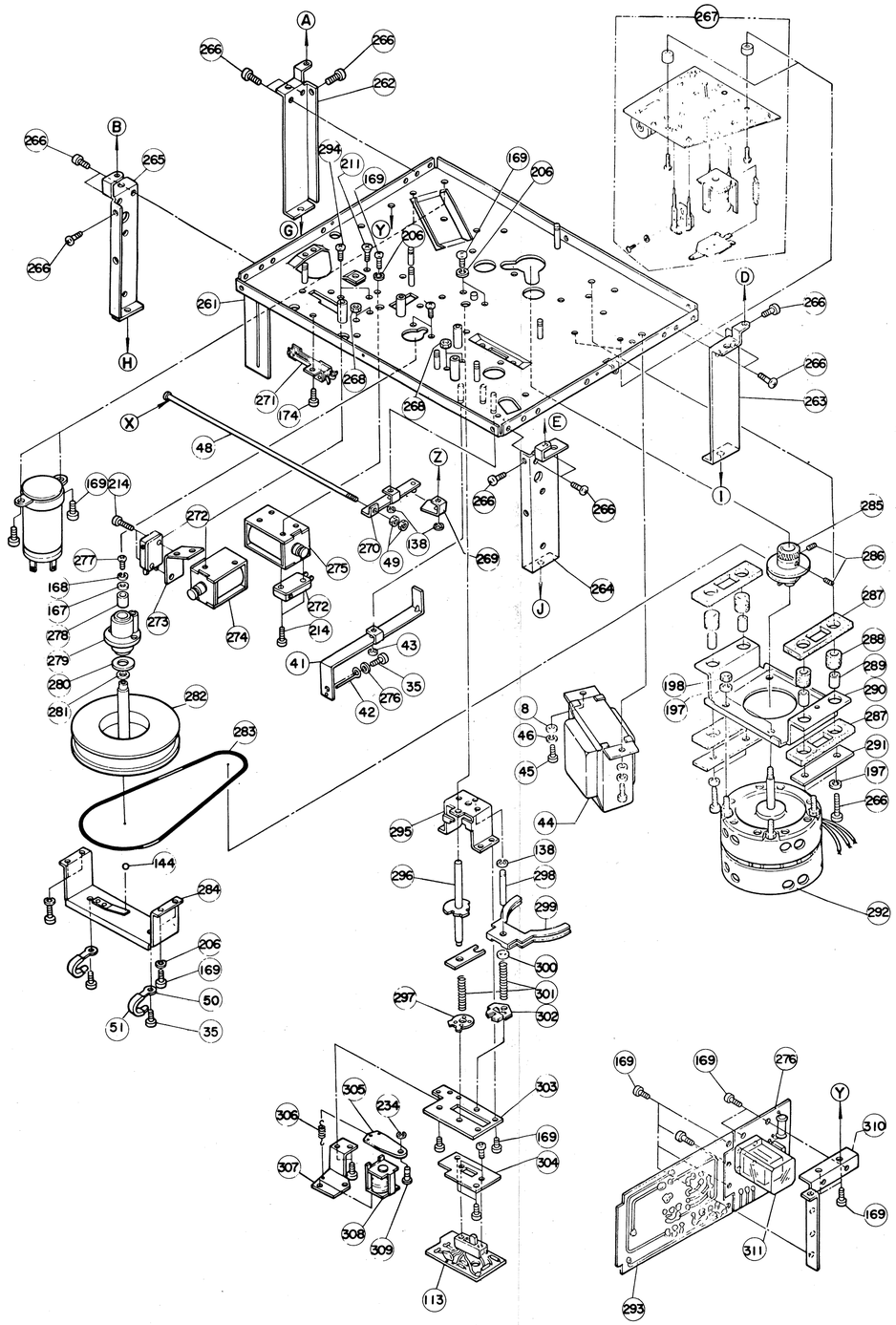

KW-4077 KW-4077

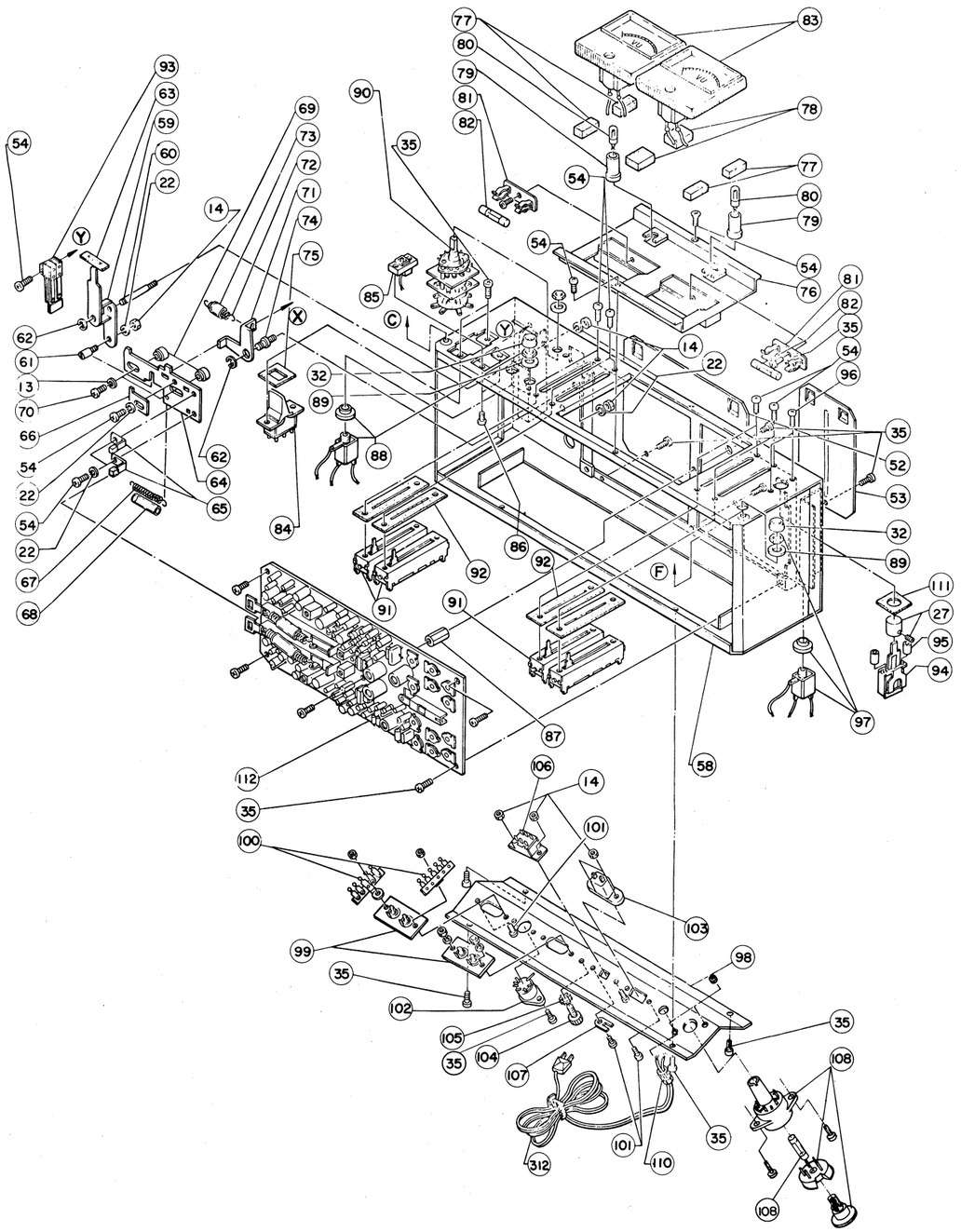

Ref. No.	Parts No.	Description	Remarks
1	X35-1280-00	Case assembly	
2	A03-0056-11	Case	
3	B04-0036-03	Screen	
4	N15-1030-11	Washer (3φ) x 6	
5	N61-2710-11	Wood screw (2.6φ) x 6	
6	J03-0012-04	Rubber legs x 4	
7	N30-4020-11	Pan head screw (4φ x 20) x 2	
8	N15-1040-11	Washer (4φ)	
9	N10-2040-11	Nut (4φ)	
10	J09-0040-04	Standing legs assembly	
11	J09-0043-04	Standing assembly legs x 2	
12	N30-3014-11	Pan head screw (3φ x 14) x 4	
13	N15-1030-11	Washer (3φ) x 4	
14	N10-2030-11	Nut (3φ) x 12	
15	A70-0019-11	Panel assembly	
16	B07-0045-14	Tape counter window	
17	J09-0042-14	Knob base	
18	J21-0708-14	Indicator hardware x 2	
19	B08-2012-04	Indicator	
20	K20-0100-03	Control lever	
21	N30-3016-11	Pan head screw (3φ x 16)	
22	N16-0030-41	Spring washer	
23	K21-0222-04	Tape speed selector knob	
24	N30-3006-15	Pan head screw (3φ x 6)	
25	K20-0002-14	Knob	
26	N73-4006-11	Speed change knob screw (4φ x 6)	
27	K29-0029-24	Push button (POWER)	
28	K29-0037-04	Knob (PLAY RECORD) x 4	
29	K27-0012-04	Recording knob	
30	F08-0029-03	Housing assembly (upper)	
31	F08-0027-02	Housing (lower)	
32	J41-0005-04	Phone bushing x 3	
33	J19-0092-04	Spacer x 6	
34	N35-3008-15	Set screw (3φ x 8) x 6	
35	N30-3006-11	Pan head screw (3φ x 6)	
36	D40-0086-05	Mechanism assembly	
37	K29-0054-14	Direction selector	
38	D21-0146-04	Direction selector stopper	
39	N24-3020-60	E ring washer (2φ) x 2	
40	D40-0084-00	Lever assembly	
41	D10-0052-04	Lever	
42	J12-0044-04	Lever pin	
43	N24-3030-60	E ring washer (3φ) x 6	
44	L09-0091-05	Power transformer	
45	N30-4006-11	Pan head screw (4φ x 6) x 2	
46	N16-0040-41	Spring washer (4φ) x 6	
47	X25-0005-21	Amp assembly	
48	D17-0016-04	Rod	
49	N10-2020-11	Nut (2φ) x 2	
50	J21-0392-04	Wire holder x 2	

74 74

Ref. No.	Parts No.	Description	Remarks
99	E13-0204-05	2P pin jack (LINE IN, OUT) x 4	
100	E22-0405-05	Lug type terminal strip x 2	
101	E30-3008-11	Pan head screw (3φ x 8) x 6	
102	E06-0501-05	DIN connector	
103	E08-0205-05	AC OUTLET	
104	N08-0002-04	Gnd. terminal	
105	N17-1040-41	Inter rock washer	
106	S31-2004-05	Hz switch (slide)	
107	D32-0021-04	Switch stopper	
108	E29-0018-05	Voltage selector with fuse holder	
109	F05-1023-05	Fuse	
110	J41-0006-00	Cord bushing	
111	G16-0029-04	Sheet (D)	
112	X28-0009-00	REC/PLAY PC board assembly	
113	X28-0010-00	Equalizer PC board assembly	
114	003-4003	Hollow set (3) x 2	
115	003-4016	Hollow set (2) x 2	
116	099-4005	Reel table x 2	
117	065-4005	Spring felt x 2	
118	099-4001	Reel (1) x 2	
119	003-4031	Washer x 2	
120	123-4012	Spring x 2	
121	003-4032	Washer	
122	S-10	Stop ring x 2	
123	081-4015	Counter pulley	
124	084-4021	Reel shaft	
125	084-4046	Reel shaft	
126	069-4005	Brake lining x 2 (for tension)	
127		Truss screw (3φ x 6) x 2	
128	TIF-0327	Back tension spring assembly	
129	RE-4HHC	E ring washer	
130	TIF-0325	Idler assembly x 2	
131	065-4024	Friction felt x 2	
132	081-4018	Intermediate pulley x 2	
133	123-4030	Take up spring x 2	
134	003-4048	Washer x 10	
135	003-4035	Washer x 7	
136	TIF-0339	Intermediate pulley lever assembly (2)	
137	TIF-0338	Intermediate pulley lever assembly (1)	
138	RE-3HHC	E ring washer x 14	
139	172-4001	Barancer	
140	122-4007	Boal bearing	
141	322-4083	Spring bracket	
142	062-4006	Vinyl tube	
143	123-4039	Spring	
144		Steel ball	
145	085-4031	Reverse round belt	
146	084-4053	Pulley shaft x 2	
147	003-4056	Washer x 2	

Ref. No.	Parts No.	Description	Remarks
148	003-4054	Washer x 2	
149	TIF-0326	Pulley assembly	
150	003-4043	Ring x 2	
151	313-4004	Slip disc	
152	123-4029	Spring x 2	
153	TX-3380A	Washer	
154	069-4001	Brake lining x 2	
155	086-4036	Brake (L)	
156	065-4023	Sponge x 5	
157	123-4021	Brake spring x 2	
158	086-4035	Brake (R)	
159	086-4061	Remote control brake lever (3)	
160	123-4033	Remote control brake spring	
161	086-4058	Remote control brake spring	
162	033-4001	Washer	
163	086-4043	Shut off switch lever (1)	
164	086-4034	Main lever	
165	086-4052	Sub lever	
166	SP26-3HHC	Pan head screw (2.6φ x 3) x 4	
167	2W26-HH	Washer (2.6φ) x 2	
168	SW26	Spring washer x 7	
169	SP3-5HHC	Pan head screw x 28	
170	086-4015	Main lever (2)	
171	299-4012	Tape counter	
172	TIF-0378	Drive pulley lever assembly	
173	003-4007	Drive pulley lever stopper x 2	
174	SP3-6R	Pan head screw x 28	
175	086-4059	Remote control brake lever (1)	
176	123-4032	Pinch roller off spring	
177	069-4004	Belt stopper x 4	
178	086-4056	Auto shut off lever	
179	085-4029	Counter belt	
180	264-4012PU	Leaf switch (for FF)	
181	W3-HH	Washer x 4	
182	NG-79C	Bushing (2) x 4	
183	160-4003	Pinch roller lever stopper	
184	086-4050	Pinch roller lever	
185	105-4006	Holder	
186	003-4040	Washer x 3	
187	003-4046	Washer	
188	264-4007PU	Leaf switch (for play)	
189	062-4004	Vinyl tube	
190	123-4036	Spring	
191	TIF-0375	Main shaft assembly	
192	TIF-0021	Arm	
193	320-4015	Arm plate	
194	003-4041	Washer	
195	084-4049	Pinch roller lever shaft	
196	TIF-0363	Chassis	

KW-4077 KW-4077

Ref. No.	Parts No.	Description	Remarks
148	003-4054	Washer x 2	
149	TIF-0326	Pulley assembly	
150	003-4043	Ring x 2	
151	313-4004	Slip disc	
152	123-4029	Spring x 2	
153	TX-3380A	Washer	
154	069-4001	Brake lining x 2	
155	086-4036	Brake (L)	
156	065-4023	Sponge x 5	
157	123-4021	Brake spring x 2	
158	086-4035	Brake (R)	
159	086-4061	Remote control brake lever (3)	
160	123-4033	Remote control brake spring	
161	086-4058	Remote control brake spring	
162	033-4001	Washer	
163	086-4043	Shut off switch lever (1)	
164	086-4034	Main lever	
165	086-4052	Sub lever	
166	SP26-3HHC	Pan head screw (2.6ϕ x 3) x 4	
167	2W26-HH	Washer (2.6ϕ) x 2	
168	SW26	Spring washer x 7	
169	SP3-5HHC	Pan head screw x 28	
170	086-4015	Main lever (2)	
171	299-4012	Tape counter	
172	TIF-0378	Drive pulley lever assembly	
173	003-4007	Drive pulley lever stopper x 2	
174	SP3-6R	Pan head screw x 28	
175	086-4059	Remote control brake lever (1)	
176	123-4032	Pinch roller off spring	
177	069-4004	Belt stopper x 4	
178	086-4056	Auto shut off lever	
179	085-4029	Counter belt	
180	264-4012PU	Leaf switch (for FF)	
181	W3-HH	Washer x 4	
182	NG-79C	Bushing (2) x 4	
183	160-4003	Pinch roller lever stopper	
184	086-4050	Pinch roller lever	
185	105-4006	Holder	
186	003-4040	Washer x 3	
187	003-4046	Washer	
188	264-4007PU	Leaf switch (for play)	
189	062-4004	Vinyl tube	
190	123-4036	Spring	
191	TIF-0375	Main shaft assembly	
192	TIF-0021	Arm	
193	320-4015	Arm plate	
194	003-4041	Washer	
195	084-4049	Pinch roller lever shaft	
196	TIF-0363	Chassis	

Ref. No.	Parts No.	Description	Remarks
197	SW4-HHC	Spring washer x 7	
198	N4-HH	Nut x 7	
199	NG-79L	Bushing (3)	
200	322-4067	Switch bracket	
201	240-4029	PC board	
202	SP26-5HHC	Pan head screw	
203	264-400 2PU	Slide switch	
204	123-4025	Slide switch spring	
205	322-4064	Switch bracket	
206	SW3-HHC	Spring washer x 20	
207	2W3HH	Washer x 3	
208	003-4050	Sleeve x 2	
209	086-4057	Reverse switch lever	
210	G16-0026-04	Sheet (A)	
211	SS3-6HHC	Flat head screw x 4	
212	322-4063	Speed change bracket	
213	264-4010PU	Mode switch	
214	SP26-12HHC	Pan head screw x 6	
215	264-4005PU	Microswitch (for shut off)	
216	C502	Capacitor (0.047μF)	
217	086-4044	Shut off switch lever (2)	
218	264-4006PU	Microswitch (for change of direction)	
219	341-4008	Lamp cover	
220	B30-0026-15	Lamp	
221	322-4065	Lamp bracket	
222	N2.6-HH	Nut x 6	
223	020-4002	Shield case x 2	
224	284-4001PU	Rec/Playback head x 2	
225	005-4004	Spacer (2) x 2	
226	SP2-8HHC	Pan head screw x 9	
227	320-4028	Rec/Palyback head plate	
228	123-4035	Spring x 9	
229	284-4002PU	Erase head	
230	005-4003	Spacer (1) x 3	
231	320-4019	Rec/Playback head plate	
232	SP1.7-4HHC	Pan head screw (1.7ϕ) x 4	
233	SP1.7-5.5HHC	Pan head screw (1.7ϕ) x 4	
234	RE-2HHC	E ring washer x 5	
235	065-4001	Tape pad x 4	
236	320-4025	Tape pad plate (2)	
237	123-4023	Pad spring x 2	
238	320-4026	Tape pad plate (4)	
240	320-4020	Tape pad plate (1)	
241	SP2.6-5HHC	Truss screw (2.6 x 5)	
242	003-4004	Washer x 2	
243	081-4006 (60Hz)	Pinch roller	
	081-4020 (50Hz)	Pinch roller	
244	326-4006	Tape lifter	
245	TIF-0347	Pinch roller lever assembly	

74 74

Ref. No.	Parts No.	Description	Remarks
246	168-4003	Tape guide x 2	
247	084-4044	Pad plate	
248	084-4055	Pad shaft	
249	084-4045	Pinch roller shaft	
250	TIF-0361	Sub chassis assembly	
251	123-4031	Pinch roller spring	
252	J12-0043-04	Housing pin x 4	
253	J30-0064-04	Spacer x 4	
254	105-4016	Tape guide x 2	
255	084-4052	Pinch roller lever guide x 3	
256	168-4005	Sensing pole (A) x 2	
257	168-4006	Sensing pole (B) x 2	
258	021-4003	Base x 2	
259		Lug type terminal strips	
260	086-4051	Pad	
261	322-4072	PC board holder	
262	321-4016	Install hardware (B)	
263	321-4015	Install hardware (A)	
264	321-4017	Install hardware (C)	
265	321-4018	Install hardware (D)	
266	SP4-6HHC	Pan head screw (4ϕ x 6)	
267	240-4033	Control PC board (B)	
268	N3-HH	Nut (3ϕ) x 4	
269	083-4009	Record control cam	
270	086-4062	Record control lever	
271	264-4011PU	Leaf switch (S8)	
272	264-4004PU	Microswitch (S14)	
273	020-4003	Shield plate	
274	P9F-0085	Solenoid (PL1)	
275	P9F-0086	Solenoid (PL2)	
276	TIF-0381	Control PC board (A)	
277		Truss screw (2.6ϕ x 6)	
278	084-4051	Capstan sleeve	
279	TIF-0333	Capstan holder assembly	
280	003-4029	Washer	
281	003-4026	Washer	
282	TIF-332	Capstan assembly	
283	085-4007	Capstan belt	
284	TIF-0025	Flywheel bracket assembly	
285	081-4017	Motor pulley	
286	M3-6	Set screw	
287	003-4036	Motor cushion	
288	003-4037	Collar	
289	010-4009	Collar	
290	322-4066	Motor bracket	
291	003-4051	Washer	
292	281-4001PU	Motor	
293	X26-0002-00	POWER SUPPLY and OSC board	
294	P3-6R	Pan head screw (3ϕ x 6) x 2	

Ref. No.	Parts No.	Description	Remarks
295	322-4061	Speed change cam bracket	
296	TIF-0369	Speed change calked assembly	
297	083-4010	Cam (for equarizer)	
298	084-4043	Speed change shaft (1)	
299	086-4046	Speed change lever	
300	TX-3380A	Washer x 4	
301	123-4026	Speed change spring x 2	
302	086-4042	Equalizer change lever x 2	
303	322-4082	Speed change cam bracket	
304	320-4024	Equalizer switch stopper	
305	162-4001	Armature	
306	123-4037	Speed change stopper spring	
307	322-4081	Speed change stopper bracket	
308	299-4013	Small solenoid	
309	084-4066	Speed change stopper shaft	
310	322-4074	Relay bracket	
311	REF-31502	Relay	
312	E30-0046-05	Power cord	