STEREO CASSETTE DECK

KX-48C

SERVICE MANUAL

KENWOOD

©1989-3 PRINTED IN JAPAN
B51-3790-00(B)1660

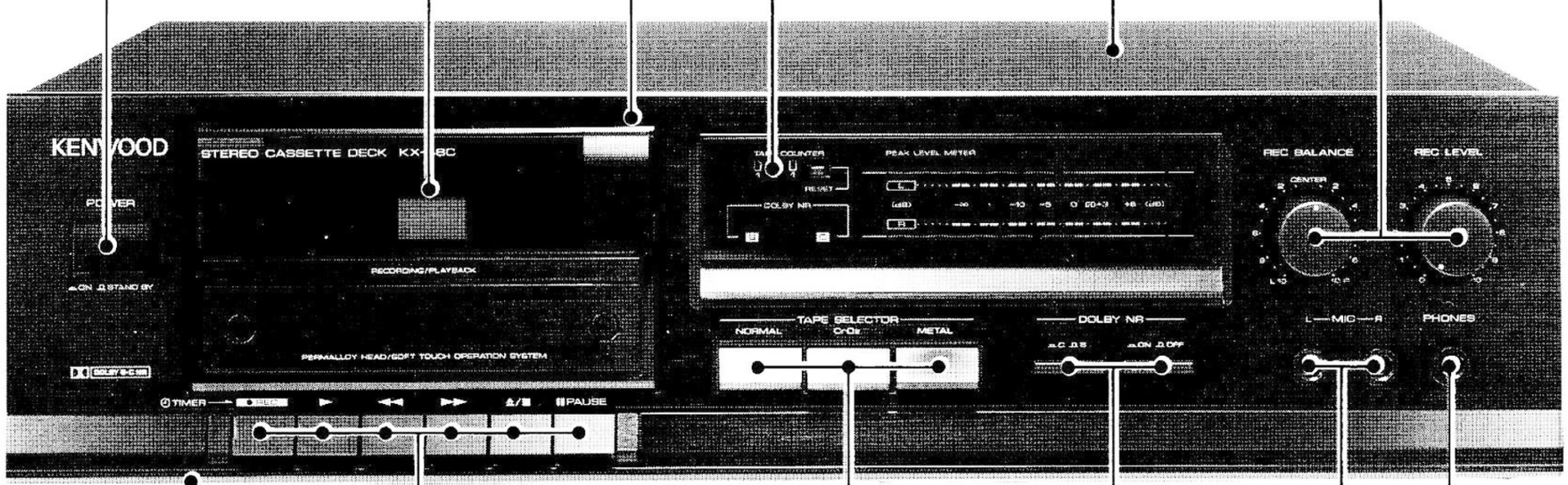

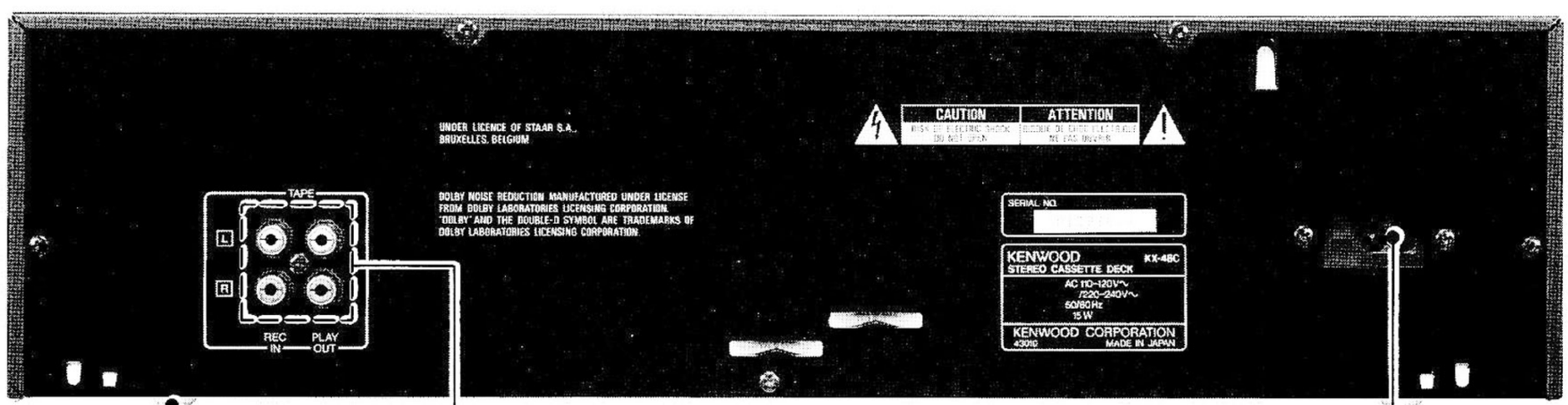

Foot
(J02-0366-15) ×2

Phono jack
(E13-0446-05)

AC inlet
(E03-1002-25)

* Refer to parts list on page 18.

CONTENTS

CONTROLS, INDICATORS AND CONNECTORS 2
DISASSEMBLY FOR REPAIR 3
BLOCK LEVEL DIAGRAM 4
CIRCUIT DESCRIPTION 5
ADJUSTMENT 6
REGLAGE 7
ABGLEICH 8
PC BOARD 9
SCHEMATIC DIAGRAM 13
EXPLODED VIEW (MECHANISM) 16
EXPLODED VIEW (UNIT) 17
PARTS LIST 18
SPECIFICATIONS ..... Back cover

CONTROLS, INDICATORS AND CONNECTORS

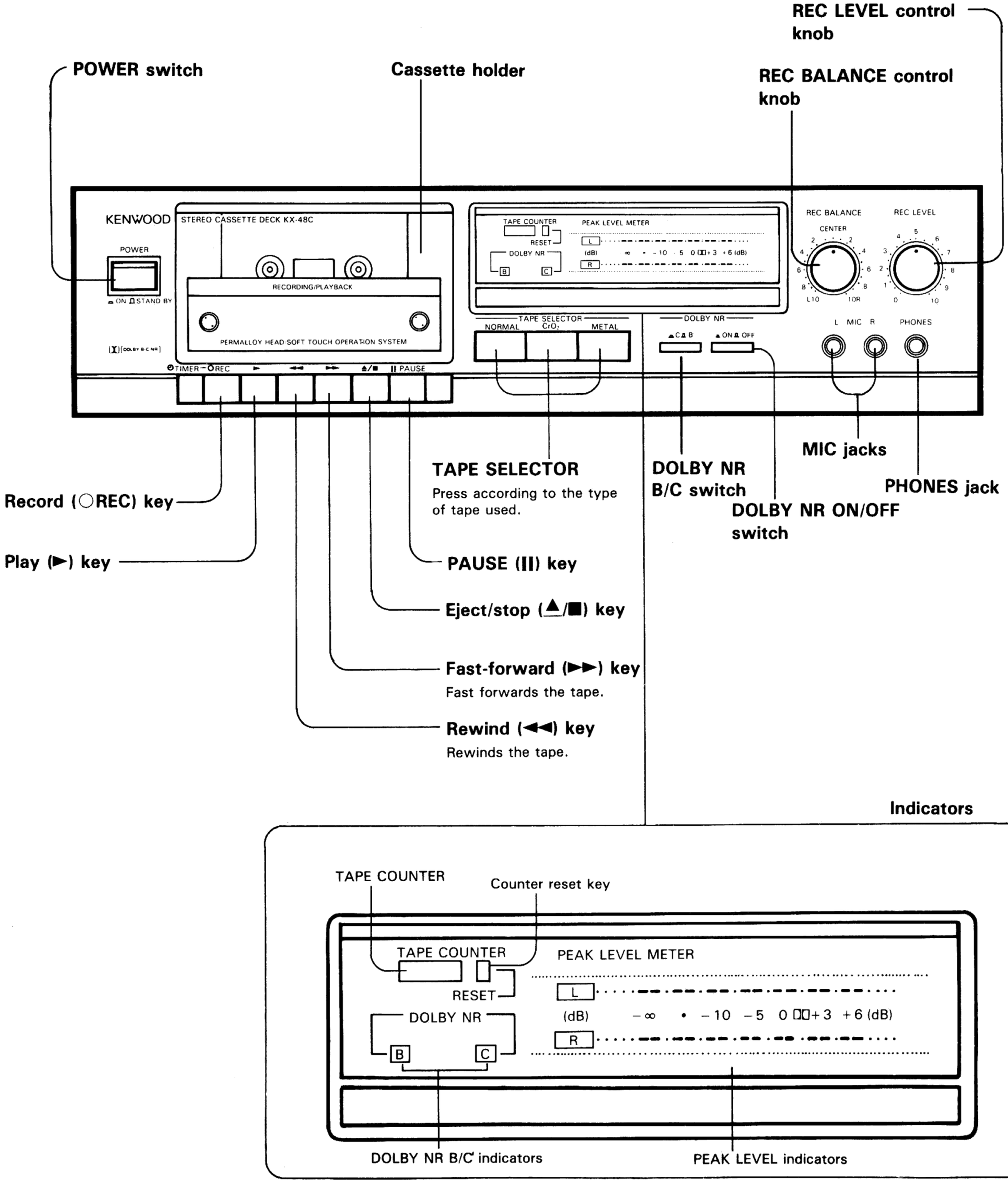

DISASSEMBLY FOR REPAIR

(1) Press the EJECT button and open the cassette holder ❶.
(2) Detach the cassette lid as shown by the arrow ❷.
(3) Remove the six screws fixing the panel ❸.
(4) Pull the front panel forward and off ❹.

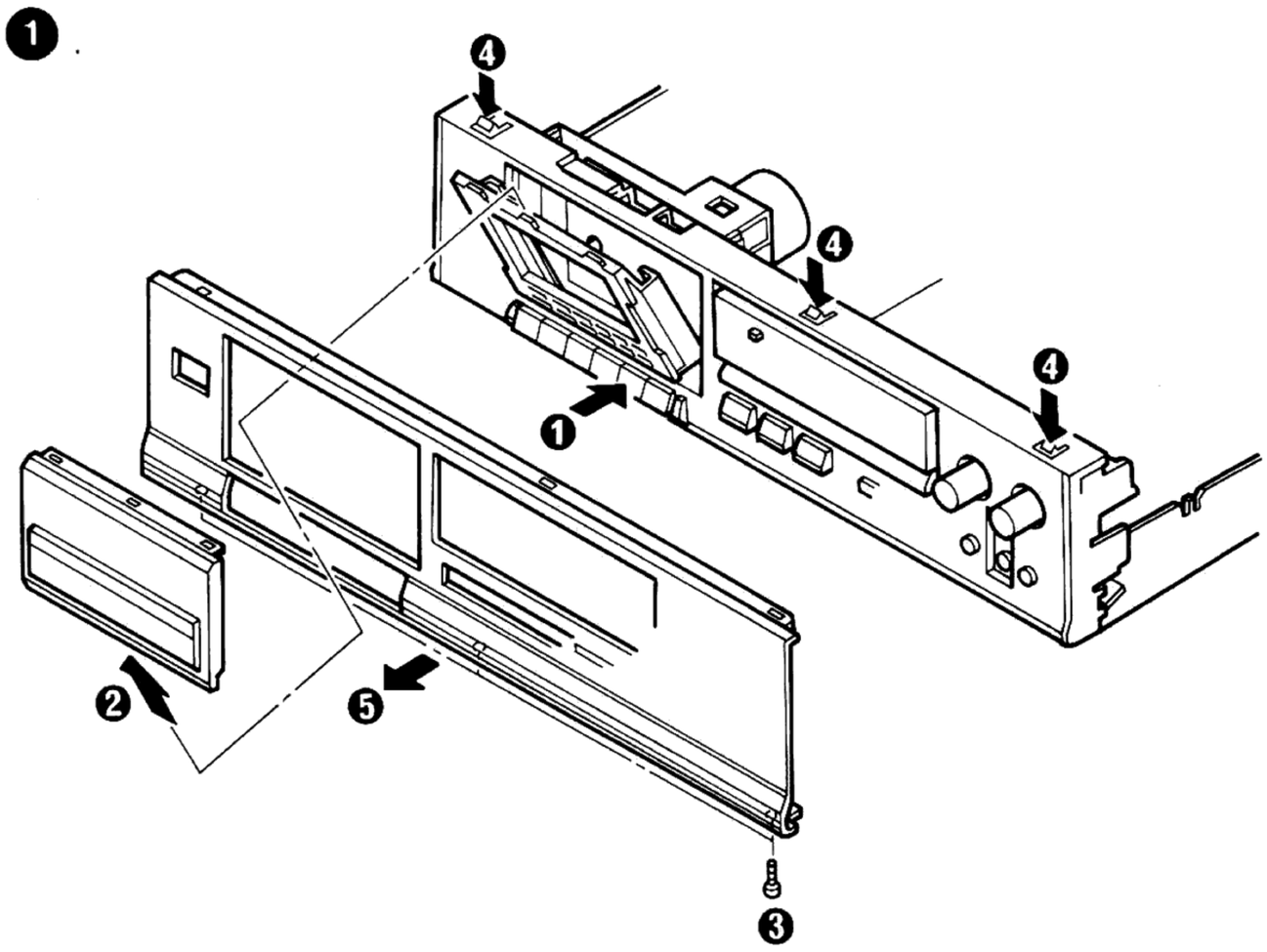

(5) Remove the spring between the REC/PLAY switch (S1) and the mechanism assembly ❺.
(6) Remove the TAPE SELECTOR, DOLBY NR, and REC LEVEL knobs ❻.
(7) Remove the MIC jack metal fitting ❼.
(8) Remove the four screws fixing the sub panel ❽.
(9) Pull the sub panel forward and off ❾.

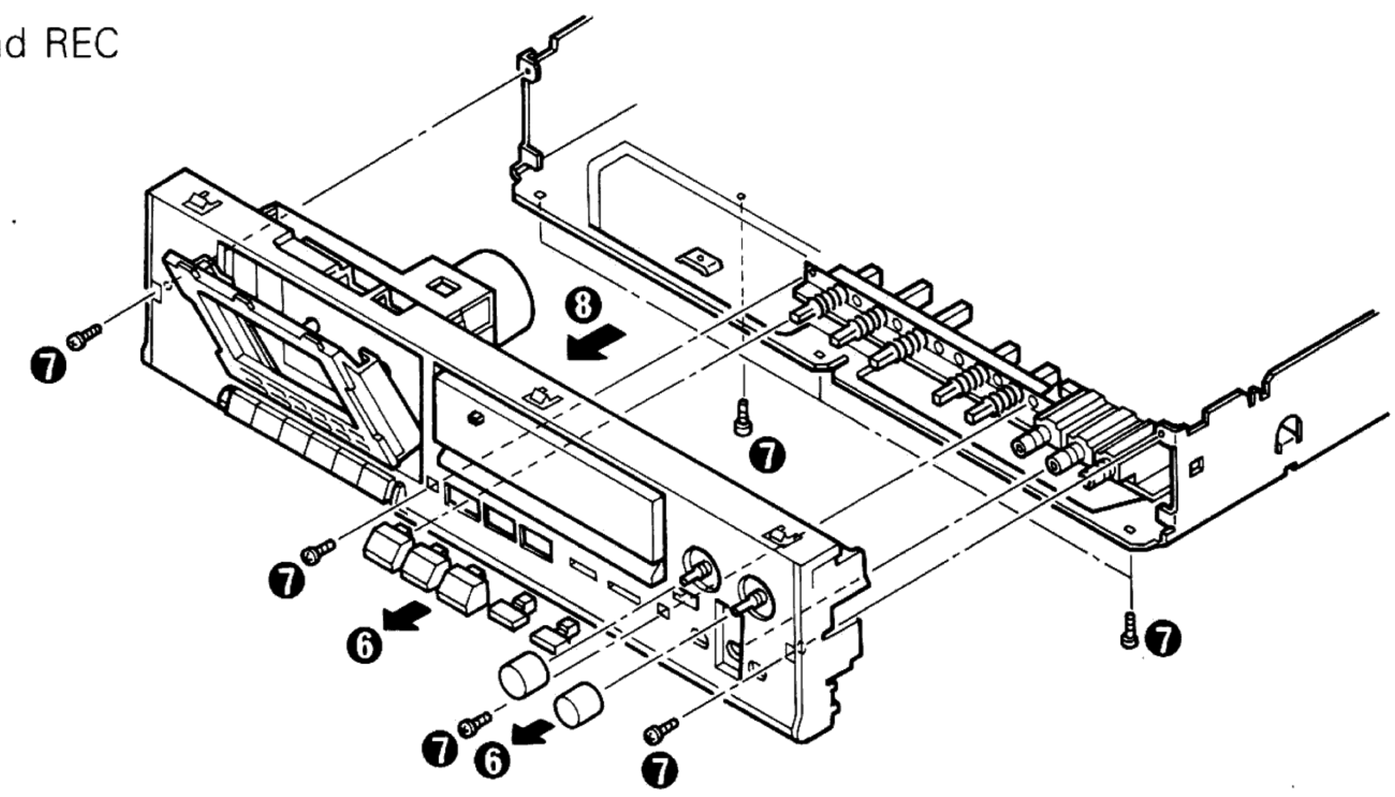

(10) Remove the counter belt ❿.
(11) Remove the four screws fixing the mechanism assembly ⓫.
(12) Remove the mechanism assembly in the direction of the arrow ⓬.

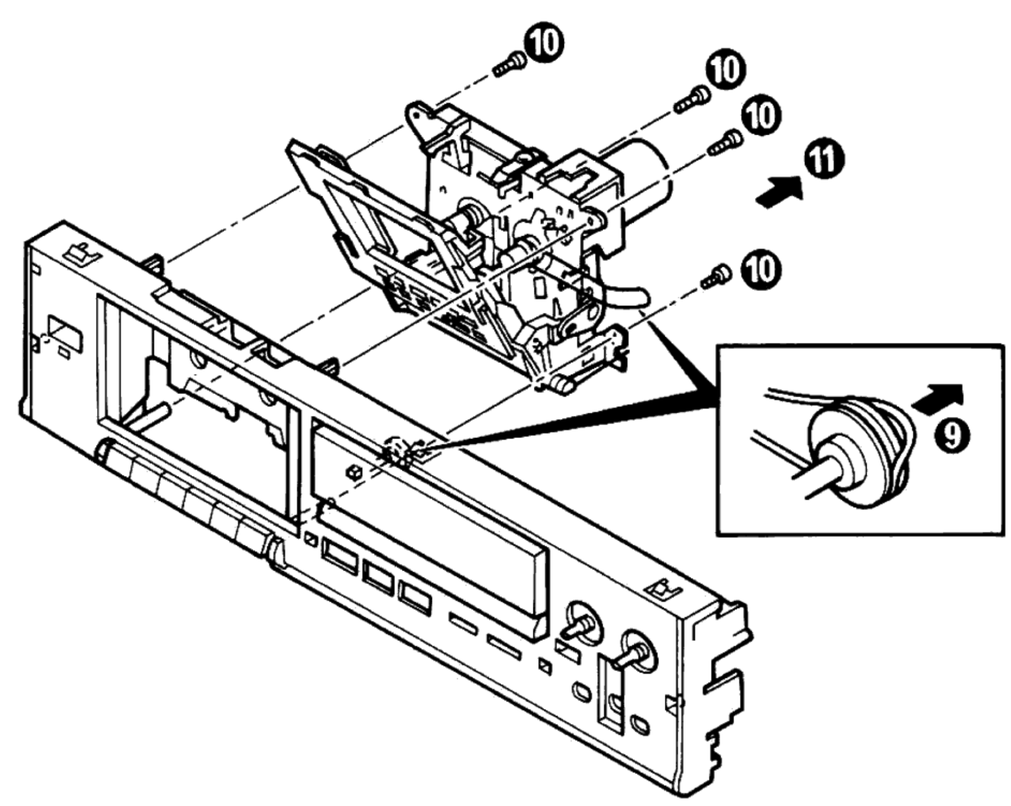

www.hifiengine.com

BLOCK DIAGRAM

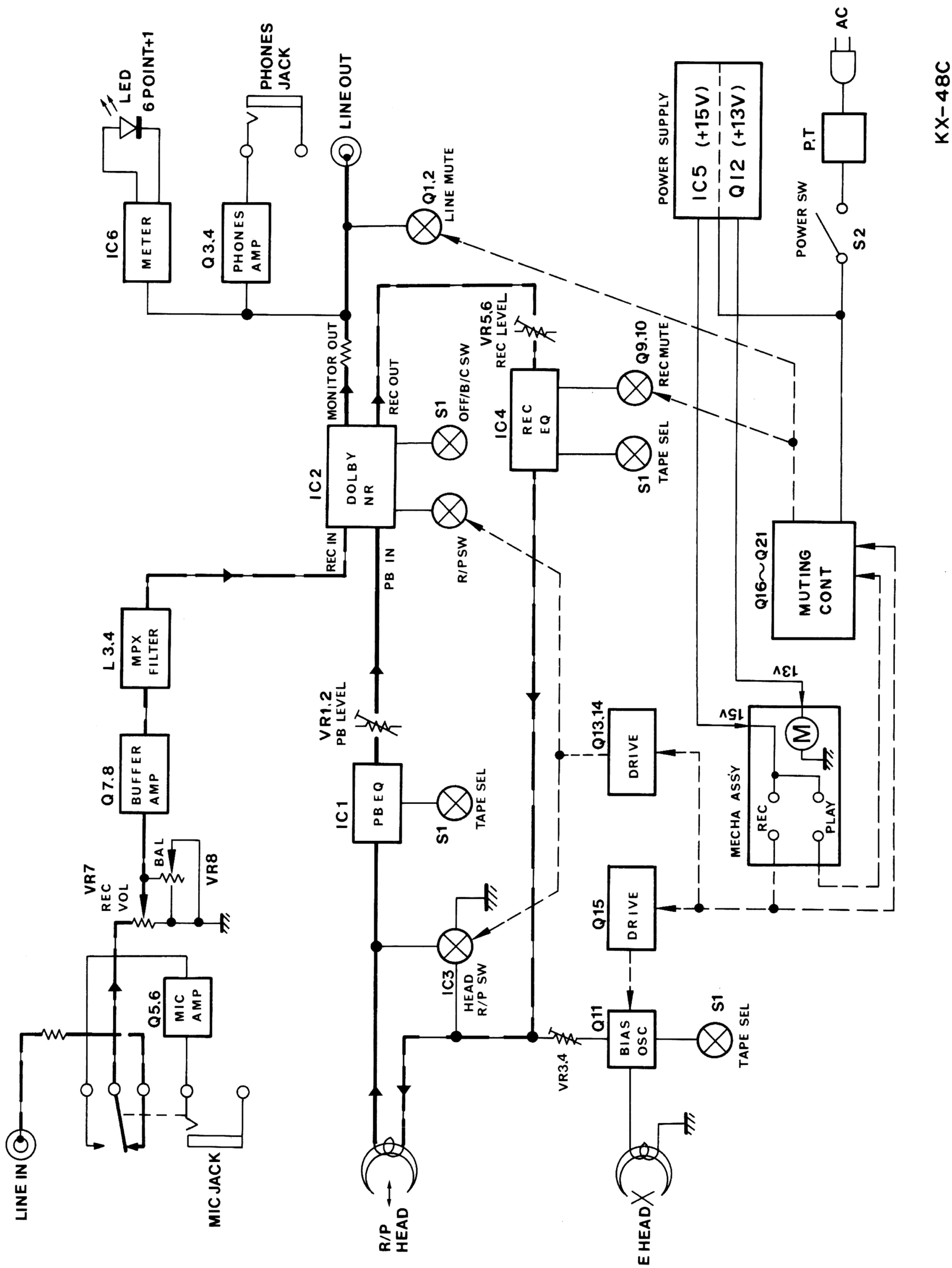

CIRCUIT DESCRIPTION

Description of Components

Board name: Recording/Play Amplifier Unit (X28-1990-10)

Component	Component Name	Use/Function	Operation/Condition/Compatibility
IC1	μPC1228HA	PB EQ	
IC2	HA12088ANT	DOLBY B/C NR	
IC3	μPC1330HA	HEAD SELECTION	At play, pins (1) and (9) →GND. At recording, pins (2) and (7) →GND.
IC4	M5218P, NJM4565D	REC AMP	
IC5	AN7815F, μPC7815HF	+15V AVR	
IC6	AN6888	LEVEL METER	
Q1, 2	2SD1302 (S, T)	LINE MUTE	PLAY, REC, REC/PAUSE →OFF
Q3, 4	2SC1845 (F, E)	HEADPHONE AMP	
Q5, 6	2SC1740S (Q, R), 2SC945(A)(Q, P)	MIC AMP	
Q7, 8	2SC1845S (F, E)	MPX BUFF	
Q9, 10	2SC1740S (Q, R), 2SC945 (A), P	REC MUTE	REC, REC/PAUSE →OFF, PLAY→ON
Q11	2SD863 (E, F)	BIAS OSC	Erase head/recording head OSC control
Q12	2SD882	+13V AVR	
Q13	2SC1740S (Q, R), 2SC945 (A)(Q, P)	R/P SELECT DRIVE	
Q14	2SA733 (A)(Q, P), 2SA933 (Q, R)	R/P SELECTION	PLAY →OFF/REC, REC/PAUSE→ON
Q15	2SC3246 (H, J)	BIAS ON/OFF	REC, REC/PAUSE →ON
Q16	2SA733 (A)(Q, P), 2SA933 (Q, R)	LINE MUTE DRIVE	
Q17	2SA733 (A)(Q, P), 2SA933 (Q, R)	REC MUTE DRIVE	
Q18	2SC1740S (Q, R), 2SC945 (A)(Q, P)	REC MUTE DRIVE	
Q19, 20	2SC1740S (Q, R), 2SC945 (A)(Q, P)	MUTE DRIVE	
Q21	2SC1740S (Q, R), 2SC945 (A)(Q, P)	POWER ON MUTE DRIVE	

Muting Control Circuit

At power ON

To point (A), the power supply which turns ON earliest is connected. Thus, by power ON, Q21 acts to drive ON muting. In timer play or timer recording, C111 starts to be charged after Q20 turns ON. Thereby, the base voltage of Q19 approaches the "L" level, after about 3 seconds, to drive OFF muting.

At power OFF

Power is supplied to Q16 and Q17. By power OFF, C109 starts to discharge to keep Q16 and Q17 ON for some time so that muting is held ON.

At STOP→PLAY

In the stop mode, Q19 is ON and the base of Q16 is "L" so that the line mute is ON.

When the PLAY switch is set to ON, Q20 turns ON and the base of Q19 becomes "L" so that Q19 turns OFF.
At this time, a voltage obtained from the voltage division by R150 and R151 is applied to the base of Q16 to turn OFF so that the line mute is turned OFF.
The time until muting is removed is determined by the charge time of C110.

At STOP→REC:

In the stop or play mode, Q18 is OFF and Q17 is ON so that the recording mute is ON.
When the REC switch is set to ON, Q18 turns ON and the base of Q17 operates in the same manner as does Q16 at STOP→PLAY so that the recording mute turns OFF in the same timing as does the line mute.

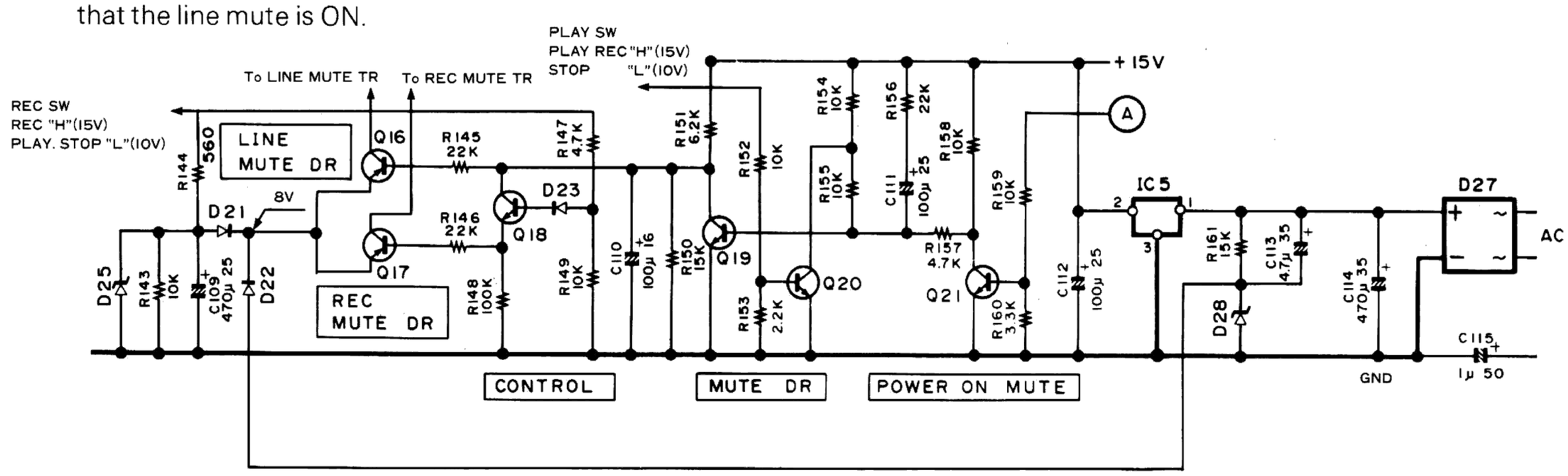

ADJUSTMENT

No.	ITEM	INPUT SETTINGS	OUTPUT SETTINGS	CASSETTE TAPE DECK SETTINGS	ALIGNMENT POINTS	ALIGN FOR	FIG.
CASSETTE DECK SECTION		TAPE: NORMAL, DOLBY: OFF, INPUT: LINE				0dBs=0.775V	
I REC/PLAY HEAD							
[1]	DEMAGNETIZATION	–	–	POWER: OFF Remove the cassette door.	REC/PLAY head	Demagnetize the REC/PLAY head with a head demagnetizer.	
[2]	CLEANING	–	–	PLAY	REC/PLAY head erase head, capstan, pinch roller.	Clean the REC/PLAY head erase head, capstan and pinch roller using a cotton swab slightly damped with alcohol.	
[3]	AZIMUTH	MTT-114, TCC-153 10kHz,-10dB	(B)	PLAY	Azimuth adjustment screw.	Maximum	
DC MOTOR							
<i>	TAPE SPEED	MTT-111, TCC-110 3kHz -4dB	(B)	PLAY	Trimming potentiometer in the DC motor.	Adjust the tape speed so that a 3kHz signal is produced at the center of the tape.	
II PC BOARD (X28-1990)							
<1>	PLAYBACK LEVEL	MTT-256, TCC-160 315Hz, 0dB	(B)	PLAY	VR1 (L) VR2 (R)	Output level: -9.0dBs	
<2>	BIAS CURRENT	(A) 1kHz, -30dBs 10kHz, -30dBs	(B)	Adjust REC LEVEL so that the REC monitor output becomes -29dBs at 1kHz, then record and reproduce signal of 1kHz and 10kHz in alternation.	VR3 (L) VR4 (R)	Record 1kHz and 10kHz in alternation and adjust the variable resistors which control the bias current so that the same playback level is obtained.	
<3>	RECORD LEVEL	(A) 1kHz,-30dBs	(B)	Record and reproduce a 1kHz signal under the conditions set in <2>.	VR5 (L) VR6 (R)	Adjust the variable resistors so that a playback level of -29dBs is obtained.	

SYSTEM CONNECTIONS

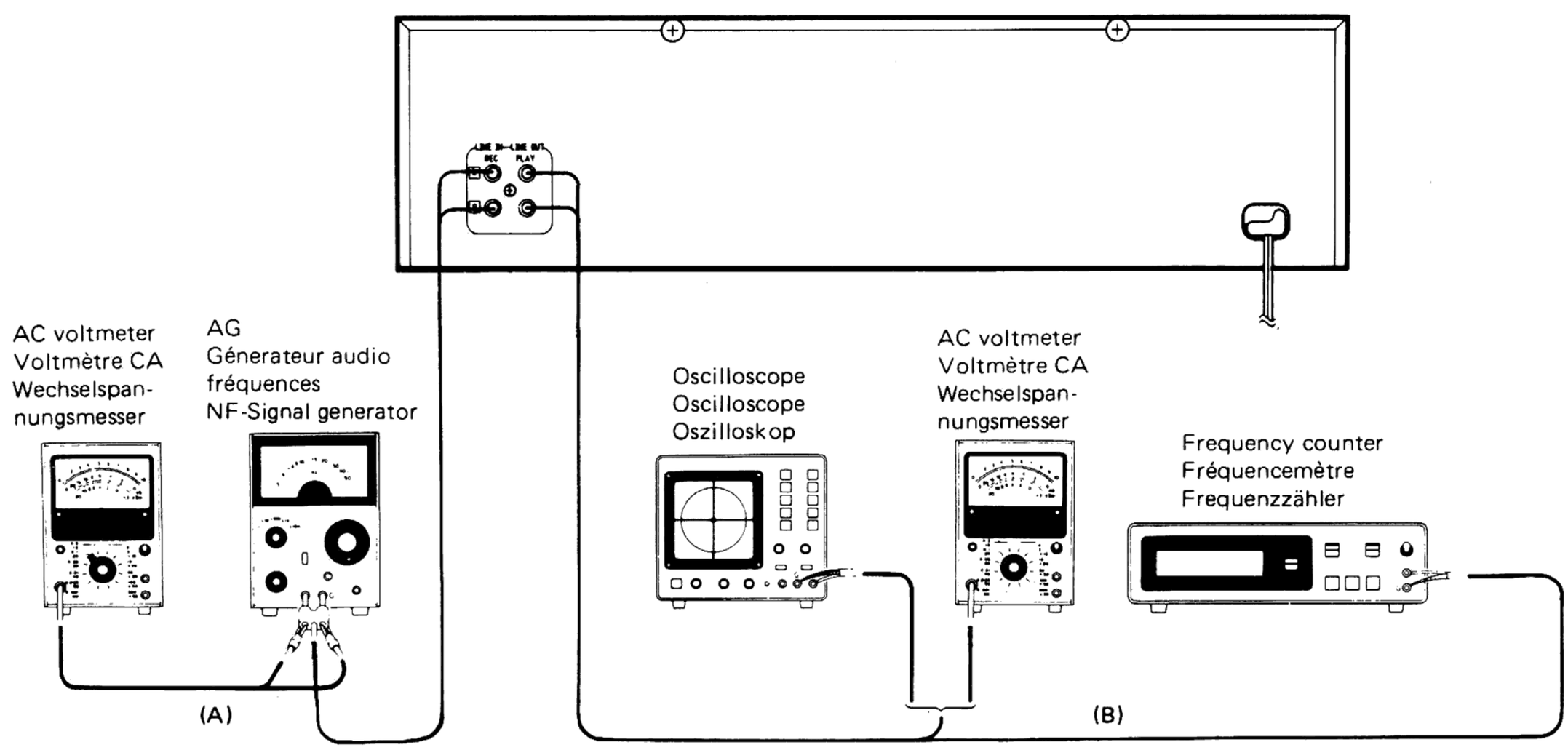

REGLAGE

N°	ITEM	REGLAGE DE L'ENTREE	REGLAGE DE LA SORTIE	REGLAGE DU MAGNETO-PHONE A CASSETTE	POINTS DE L'ALIGNEMENT	ALIGNER POUR	FIG.
SECTION DU MAGNETOPHONE		TAPE: NORMAL, DOLBY: OFF, ENTREE: LINE				0dBs=0,775V	
I TETE D'ENREGISTREMENT/LECTURE							
[1]	DEMAGNETISATION	–	–	POWER: OFF Eloigner la porte.	Tête D'ENREGISTREMENT/LECTURE	Demagnétiser la tête D'ENREGISTREMENT/LECTURE avec un démagnétiseur de tête.	
[2]	NETTOYAGE	–	–	PLAY	Tête D'ENREGISTREMENT/LECTURE tête d'effacement, cabestan, galetpresseur.	Nettoyer la tête D'ENREGISTREMENT/LECTURE la tête d'effacement, le cabestan et le galetpresseur avec un coton-tige légèrement imbibé d'alcool.	
[3]	AZIMUT	MTT-114, TCC-153 10kHz.-10dB	(B)	PLAY	Vis d'azimut	Sortie maximer.	
MOTEUR CC							
<i>	VITESSE DE DEFILEMENT	MTT-111, TCC-110 3kHz -4dB	(B)	PLAY	Résistance ajustable du moteur CC	Régler la vitesse de bande de façon qu'un signal de 3kHz soit produit au centre de la bande.	
II PLAQUE IMPRIMEE (X28-1990)							
<1>	NIVEAU DE LECTURE	MTT-256, TCC-160 315Hz, 0dB	(B)	PLAY	VR1 (G) VR2 (D)	Niveau de sortie: -9,0dBs	
<2>	COURANT DE POLARISATION	(A) 1kHz.-30dBs 10kHz.-30dBs	(B)	Régler REC LEVEL de façon que la sortie de moniteur REC soit de -29dBs à 1kHz, puis enregistrer et reproduire des signaux de 1kHz et 10kHz en alternance.	VR3 (G) VR4 (D)	Enregistrer un signal de 1kHz et 10kHz en alternance et ajuster les résistances variables qui commandent le courant de polarité de façon à obtenir le même niveau de lecture.	
<3>	NIVEAU D'ENREGISTREMENT	(A) 1kHz.-10dBs	(B)	Enregistrer et reproduire un signal de 1kHz dans les conditions précisées en <2>.	VR5 (G) VR6 (D)	Ajuster les résistances variables de façon à obtenir un niveau de lecture de -29dBs.	

www.hifiengine.com

ABGLEICH

NR.	GEGENSTAND	EINGANGS-EINSTELLUNG	AUSGANGS-EINSTELLUNG	KASSETTENGERÄT-EINSTELLUNG	ABGLEICH PUNKTE	ABGLEICHEN FÜR	ABB.
CASSETTEN-DECK ABTEILUNG TAPE: NORMAL, DOLBY: OFF, EINGANG: LINE						0dBs=0,775V	
I AUFNAHME/WIEDERGABE KOPF							
[1]	ENTMAGNETI SIERUNG	–	–	POWER: OFF Den Kassettenfach deckel oben herausziehen.	AUFNAHME/ WIEDERGABE-Kopf	Entmagnetisierung von dem AUFNAHME/WIEDERGABE Kopf mit einem Tonkopf Entmagnetisierungsdrossel.	
[2]	REINIGUNG	–	–	PLAY	AUFNAHME/ WIEDERGABE-Kopf Löschkopf, Tonwelle, Andruckrolle.	AUFNAHME/WIEDERGABE-Kopf, Löschkopf, Tonwelle und Andruckrolle mit einem leicht mit Alkohol befeuch teten Wattebausch reinigen.	
[3]	AZIMUT-EINSTELLUNG	MTT-114, TCC-153 10kHz.-10dB	(B)	PLAY	Azimut Einstellschraube	Maximale	
GLEICHSTROMMOTOR							
<i>	BANDGESCH-WINDIGKEIT	MTT-111, TCC-110 3kHz -4dB	(B)	PLAY	Trimmer poten-tiometer am Gleichstrommotor	Die Bandgeschwindigkeit so justieren, daß ein 3kHz Signal auf der Mitte des Bands erzeugt wird.	
II GEDRUCKTE SCHALTPLATTE (X28-1990)							
<1>	WIEDERGABE-PEGEL	MTT-256, TCC-160 315kHz, 0dB	(B)	PLAY	VR1 (L) VR2 (R)	Ausgangspegel: -9,0dBs	
<2>	LEERLAUFSTROM	(A) 1kHz.-30dBs 10kHz.-30dBs	(B)	REC LEVEL so justieren, daß der REC Monitorausgang -29dBs bei 1kHz wird, und danach abwechselnd Signale von 1kHz und 10kHz aufnehmen und wiedergeben.	VR3 (L) VR4 (R)	Signale von 1kHz und 10kHz abwechselnd aufnehmen und die Regelwiderstände, die den Vormagnetisierugsstrom regeln, so justieren, daß der gleiche Wiedergabepegel erzielt wird.	
<3>	AUFNAHMEPEGEL	(A) 1kHz.-30dBs	(B)	Ein 1kHz Signal unter den in Punkt <2> beschriebenen Bedingungen aufnehmen und reproduzieren.	VR5 (L) VR6 (R)	Die Regelwiderstände so justieren, daß ein wiedergabepegel von -29dBs erzielt wird.	

www.hifiengine.com

PC BOARD (COMPONENT SIDE VIEW)

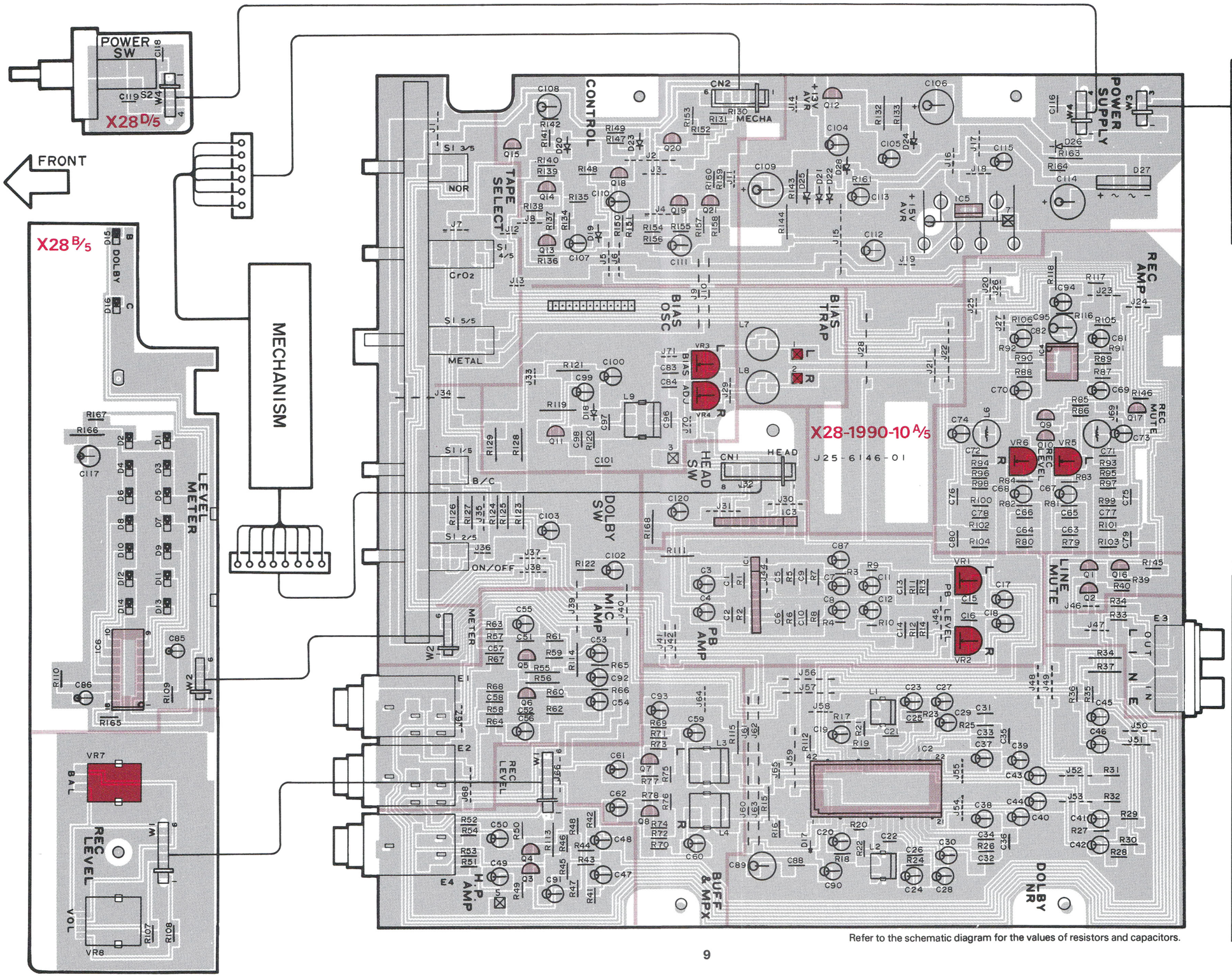

Refer to the schematic diagram for the values of resistors and capacitors.

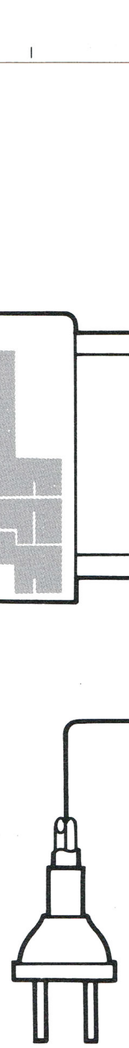

X28-1990-10

Ref. No. IC	Ref. No. Q	Address	Ref. No. IC	Ref. No. Q	Address
	1	5H	1		5F
	2	5H	2		6G
	3	7D	3		4F
	4	7D	4		3G
	5	5D	5		2G
	6	5D	6		5A
	7	6E			
	8	6E			
	9	4G			
	10	4G			
	11	4D			
	12	2F			
	13	3D			
	14	2D			
	15	2D			
	16	5H			
	17	4H			
	18	2E			
	19	2E			
	20	2E			
	21	2E			

PC BOARD (FOIL SIDE VIEW)

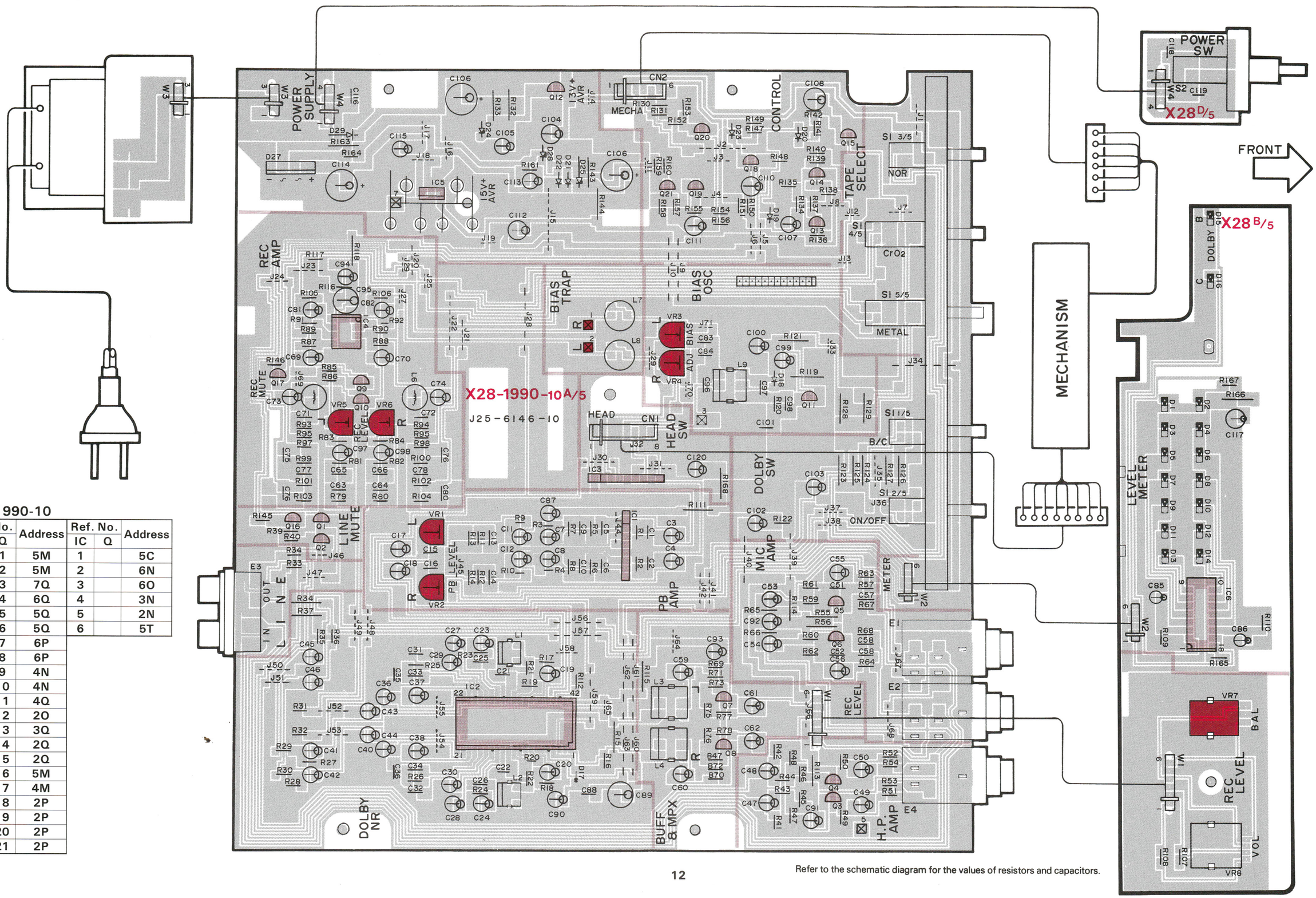

X28-1990-10

Ref. No. IC	Ref. No. Q	Address	Ref. No. IC	Ref. No. Q	Address
	1	5M	1		5C
	2	5M	2		6N
	3	7Q	3		6O
	4	6Q	4		3N
	5	5Q	5		2N
	6	5Q	6		5T
	7	6P			
	8	6P			
	9	4N			
	10	4N			
	11	4Q			
	12	2O			
	13	3Q			
	14	2Q			
	15	2Q			
	16	5M			
	17	4M			
	18	2P			
	19	2P			
	20	2P			
	21	2P			

Refer to the schematic diagram for the values of resistors and capacitors.

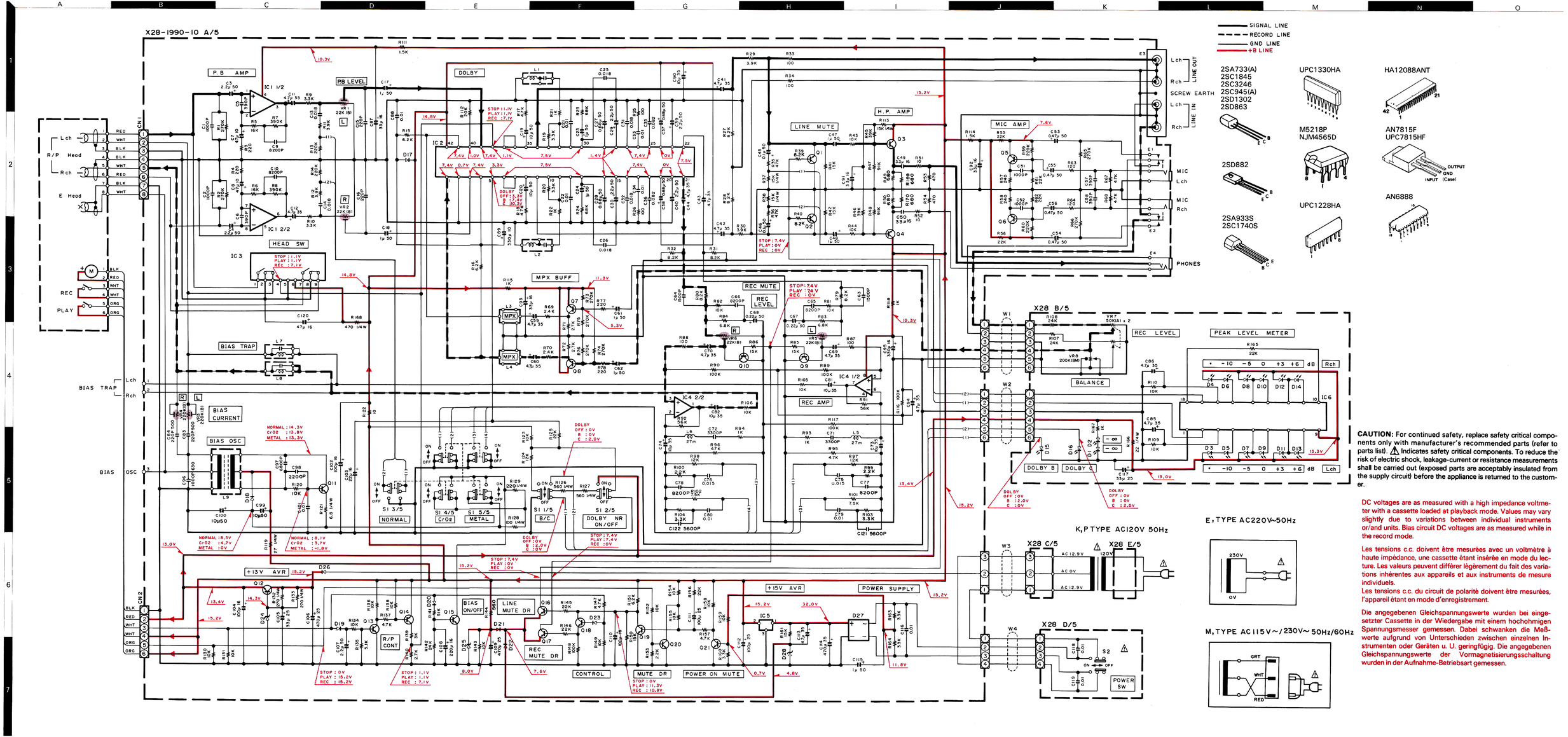

CAUTION: For continued safety, replace safety critical components only with manufacturer's recommended parts (refer to parts list). ⚠ Indicates safety critical components. To reduce the risk of electric shock, leakage-current or resistance measurements shall be carried out (exposed parts are acceptably insulated from the supply circuit) before the appliance is returned to the customer.

DC voltages are as measured with a high impedance voltmeter with a cassette loaded at playback mode. Values may vary slightly due to variations between individual instruments or/and units. Bias circuit DC voltages are as measured while in the record mode.

Les tensions c.c. doivent être mesurées avec un voltmètre à haute impédance, une cassette étant insérée en mode du lecture. Les valeurs peuvent différer légèrement du fait des variations inhérentes aux appareils et aux instruments de mesure individuels.
Les tensions c.c. du circuit de polarité doivent être mesurées, l'appareil étant en mode d'enregistrement.

Die angegebenen Gleichspannungswerte wurden bei eingesetzter Cassette in der Wiedergabe mit einem hochohmigen Spannungsmesser gemessen. Dabei schwanken die Meßwerte aufgrund von Unterschieden zwischen einzelnen Instrumenten oder Geräten u. U. geringfügig. Die angegebenen Gleichspannungswerte der Vormagnetisierungsschaltung wurden in der Aufnahme-Betriebsart gemessen.

EXPLODED VIEW (MECHANISM)

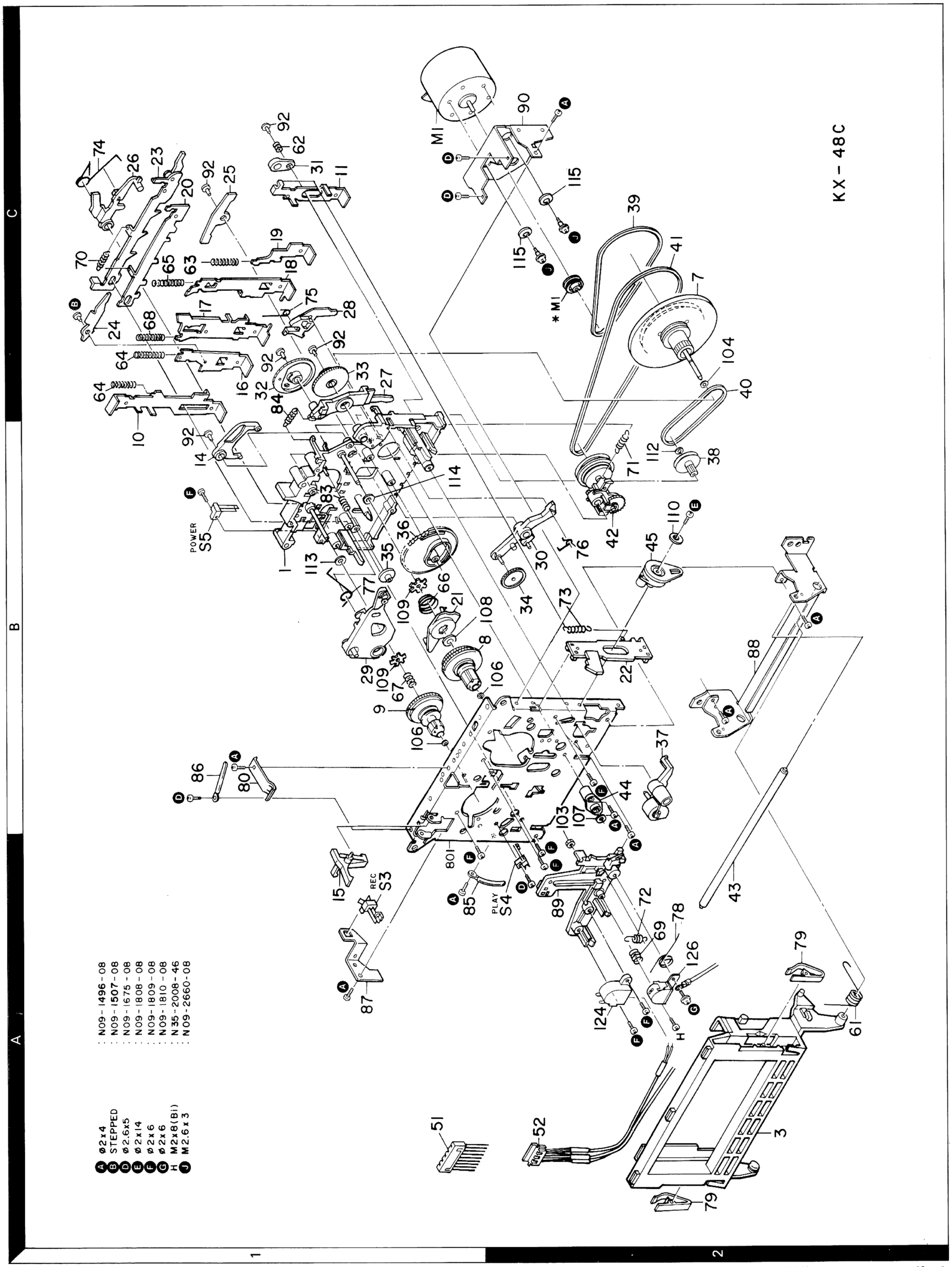

Parts with the exploded numbers larger than 700 are not supplied.

EXPLODED VIEW (UNIT)

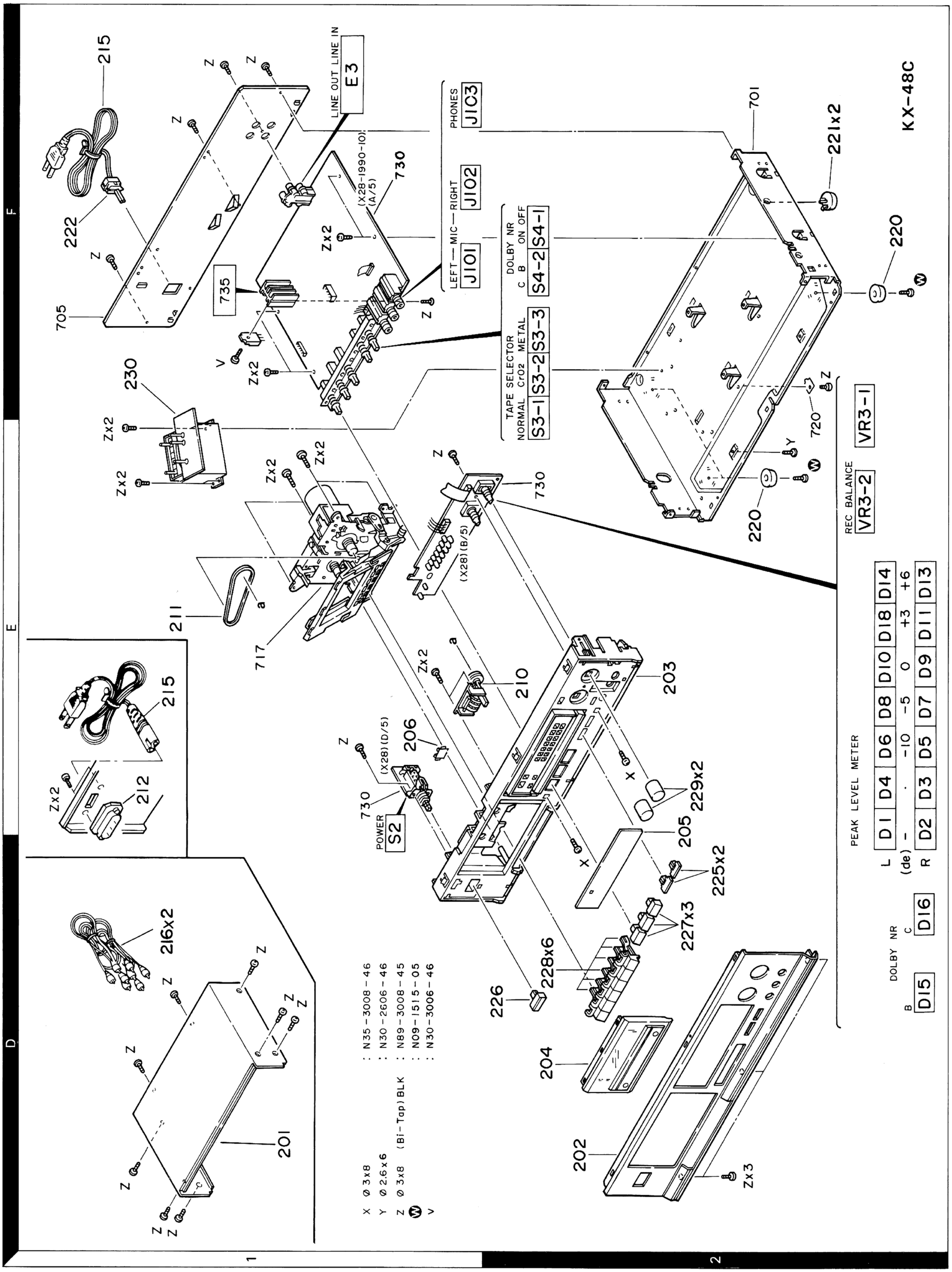

Parts with the exploded numbers larger than 700 are not supplied.

PARTS LIST

⁎ New Parts
Parts without **Parts No.** are not supplied.
Les articles non mentionnes dans le **Parts No.** ne sont pas fournis.
Teile ohne **Parts No.** werden nicht geliefert.

Ref. No. 参照番号	Address 位置	New Parts 新	Parts No. 部品番号	Description 部品名／規格	Destination 仕向	Remarks 備考
			KX-48C			
201	1D		A01-1739-01	METALLIC CABINET		
202	2D	*	A20-5758-02	PANEL		
203	2E	*	A22-1080-01	SUB PANEL		
204	2D	*	A53-1100-03	CASSETTE LID		
205	2E	*	B03-2520-04	DRESSING PLATE		
206	1E		B07-1720-04	ESCUTCHEON		
210	2E	*	B35-0041-05	TAPE COUNTER		
-			B46-0092-03	WARRANTY CARD	K	
-			B46-0096-13	WARRANTY CARD	X	
-			B46-0121-03	WARRANTY CARD	P	
-		*	B50-9461-00	INSTRUCTION MANUAL		
-		*	B50-9462-00	INSTRUCTION MANUAL	PM	
-		*	B50-9463-00	INSTRUCTION MANUAL	M	
211	1E	*	D16-0274-04	BELT		
212	1E		E03-0102-25	AC INLET	M	
⚠ 215	1F		E30-0181-05	AC POWER CORD	KP	
⚠ 215	1E		E30-1305-15	AC POWER CORD (INLET)	M	
⚠ 215	1F		E30-1341-05	AC POWER CORD	X	
216	1D		E30-0615-05	AUDIO CORD		
-		*	H01-8440-04	ITEM CARTON CASE		
-			H10-3786-02	POLYSTYRENE FOAMED FIXTURE		
-			H10-3787-02	POLYSTYRENE FOAMED FIXTURE		
-			H20-0554-04	PROTECTION COVER	M	
-			H25-0232-04	PROTECTION BAG (235X350X0.03)		
-			H25-0330-04	PROTECTION BAG	KPX	
220	2E,2F		J02-0161-04	FOOT		
221	2F		J02-0366-15	FOOT		
⚠ 222	1F		J42-0083-05	POWER CORD BUSHING	KPX	
-			J61-0307-05	WIRE BAND		
225	2E		K27-0742-14	KNOB (BUTTON) DOLBY NR		
226	2D	*	K27-1965-04	KNOB (BUTTON) POWER		
227	2D	*	K27-1971-04	KNOB (BUTTON) TAPE CERECTOR		
228	2D		K29-3582-03	KNOB (STOP,PLAY,PAUSE)		
229	2E	*	K29-3590-04	KNOB (REC BALANCE,REC LEVEL)		
⚠ 230	1F		L01-7811-05	POWER TRANSFORMER	KP	
⚠ 230	1F		L01-7812-05	POWER TRANSFORMER	X	
⚠ 230	1F		L01-7814-05	POWER TRANSFORMER	M	
W	2E,2F		N09-1515-05	TAPPING SCREW (3X8)		
X	2D,2E		N35-3008-46	BINDING HEAD MACHINE SCREW		
Y	2E	*	N86-2606-46	BINDING HEAD TAPTITE SCREW		
Z	1D,1F		N89-3008-45	BINDING HEAD TAPTITE SCREW		
			RECORD/PLAYBACK UNIT (X28-1990-10)			
D1 -16			B30-1223-05	LED(LN21CPH(V)-C)		
C1 ,2			CK45FB1H102K	CERAMIC 1000PF K		
C3 ,4			CE04KW1H2R2M	ELECTRO 2.2UF 50WV		
C5 ,6			CK45FB1H391K	CERAMIC 390PF K		
C7 ,8			CE04KW1A470M	ELECTRO 47UF 10WV		
C9 ,10			CF92FV1H822J	MF 8200PF J		
C11 ,12			CE04KW1V4R7M	ELECTRO 4.7UF 35WV		
C13 ,14			CF92FV1H183J	MF 0.018UF J		

E: Scandinavia & Europe **K**: USA **P**: Canada
U: PX(Far East, Hawaii) **T**: England **M**: Other Areas
UE: AAFES(Europe) **X**: Australia

⚠ indicates safety critical components.

www.hifiengine.com

PARTS LIST

⁎ New Parts
Parts without **Parts No.** are not supplied.
Les articles non mentionnes dans le **Parts No.** ne sont pas fournis.
Teile ohne **Parts No.** werden nicht geliefert.

Ref. No. 参照番号	Address 位置	New Parts 新	Parts No. 部品番号	Description 部品名／規格			Destination 仕向	Remarks 備考
C15 ,16			CC45FSL1H221J	CERAMIC	220PF	J		
C17 ,18			CE04KW1H010M	ELECTRO	1.0UF	50WV		
C19 ,20			CE04KW1H100M	ELECTRO	10UF	50WV		
C21 ,22			CF92FV1H103J	MF	0.010UF	J		
C23 ,24			CE04KW1H010M	ELECTRO	1.0UF	50WV		
C25 ,26			CF92FV1H183J	MF	0.018UF	J		
C27 ,28		*	CE04KW1HR68M	ELECTRO	0.68UF	50WV		
C29 ,30			CE04KW1H2R2M	ELECTRO	2.2UF	50WV		
C31 ,32			CF92FV1H183J	MF	0.018UF	J		
C33 ,34			CF92FV1H103J	MF	0.010UF	J		
C35 ,36			CF92FV1H823J	MF	0.082UF	J		
C37 ,38		*	CE04KW1HR68M	ELECTRO	0.68UF	50WV		
C39 ,40			CE04KW1H2R2M	ELECTRO	2.2UF	50WV		
C41 -44			CE04KW1V4R7M	ELECTRO	4.7UF	35WV		
C45 ,46			CE04KW1H0R1M	ELECTRO	0.1UF	50WV		
C47 ,48			CE04KW1H010M	ELECTRO	1.0UF	50WV		
C49 ,50			CE04KW1C330M	ELECTRO	33UF	16WV		
C51 ,52			CF92FV1H102J	MF	1000PF	J		
C53 -56			CE04KW1HR47M	ELECTRO	0.47UF	50WV		
C57 ,58			CK45FB1H391K	CERAMIC	390PF	K		
C59 ,60			CE04KW1V4R7M	ELECTRO	4.7UF	35WV		
C61 ,62			CE04KW1H010M	ELECTRO	1.0UF	50WV		
C63 ,64			CF92FV1H152J	MF	1500PF	J		
C65 ,66			CF92FV1H822J	MF	8200PF	J		
C67 ,68			CE04KW1HR22M	ELECTRO	0.22UF	50WV		
C69 ,70			CE04KW1V4R7M	ELECTRO	4.7UF	35WV		
C71 ,72			CF92FV1H332J	MF	3300PF	J		
C73 ,74			CE04KW1V100M	ELECTRO	10UF	35WV		
C75 ,76			CF92FV1H153J	MF	0.015UF	J		
C77 ,78			CF92FV1H822J	MF	8200PF	J		
C79 ,80			CF92FV1H103J	MF	0.010UF	J		
C81 ,82			CE04KW1V100M	ELECTRO	10UF	35WV		
C83 ,84			CC45FSL2H221J	CERAMIC	220PF	J		
C85 ,86			CE04JW1V4R7M	ELECTRO	4.7UF	35WV		
C87			CE04KW1C330M	ELECTRO	33UF	16WV		
C88			CK45FF1H103Z	CERAMIC	0.010UF	Z		
C89			CE04KW1A331M	ELECTRO	330UF	10WV		
C90			CE04KW1V100M	ELECTRO	10UF	35WV		
C91 -93			CE04KW1C330M	ELECTRO	33UF	16WV		
C94			CE04KW1V4R7M	ELECTRO	4.7UF	35WV		
C95			CE04KW1C331M	ELECTRO	330UF	16WV		
C96			C91-0773-05	POLYPRO	1000PF	J		
C97			CF92FV1H682J	MF	6800PF	J		
C98			CF92FV1H222J	MF	2200PF	J		
C99 ,100			CE04KW1H100M	ELECTRO	10UF	50WV		
C101			CF92FV1H103J	MF	0.010UF	J		
C102			CE04KW1C101M	ELECTRO	100UF	16WV		
C103			CE04KW1C220M	ELECTRO	22UF	16WV		
C104			CE04KW1C101M	ELECTRO	100UF	16WV		
C105			CE04KW1E330M	ELECTRO	33UF	25WV		
C106			CE04KW1E471M	ELECTRO	470UF	25WV		
C107			CE04KW1H2R2M	ELECTRO	2.2UF	50WV		
C108			CE04KW1C221M	ELECTRO	220UF	16WV		
C109			CE04KW1E471M	ELECTRO	470UF	25WV		
C110			CE04KW1C101M	ELECTRO	100UF	16WV		

E: Scandinavia & Europe **K**: USA **P**: Canada
U: PX(Far East, Hawaii) **T**: England **M**: Other Areas
UE : AAFES(Europe) **X**: Australia

⚠ indicates safety critical components.

www.hifiengine.com

PARTS LIST

⁎ New Parts
Parts without **Parts No.** are not supplied.
Les articles non mentionnes dans le **Parts No.** ne sont pas fournis.
Teile ohne **Parts No.** werden nicht geliefert.

Ref. No. 参照番号	Address 位置	New Parts 新	Parts No. 部品番号	Description 部品名／規格	Destination 仕向	Remarks 備考
C111,112			CE04KW1E101M	ELECTRO 100UF 25WV		
C113			CE04KW1V4R7M	ELECTRO 4.7UF 35WV		
C114			CE04KW1V471M	ELECTRO 470UF 35WV		
C115			CE04KW1H010M	ELECTRO 1.0UF 50WV		
C116			CK45FF1H103Z	CERAMIC 0.010UF Z		
C117			CE04JW1E330M	ELECTRO 33UF 25WV		
C118,119			CK45FF1H103Z	CERAMIC 0.010UF Z		
C120			CE04KW1C470M	ELECTRO 47UF 16WV		
C121,122			CF92FV1H562J	MF 5600PF J		
E1 ,2		*	E11-0194-05	PHONE JACK		
E3			E13-0446-05	PHONO JACK (4P)		
E4			E11-0156-05	PHONE JACK (3P)		
L1 ,2			L39-0106-05	TRAP COIL		
L3 ,4			L79-0720-05	LC FILTER		
L5 ,6		*	L40-2735-29	SMALL FIXED INDUCTOR		
L7 ,8			L39-0171-05	TRAP COIL		
L9		*	L32-0381-05	BIAS OSCILATING COIL		
V	1F		N30-3006-46	PAN HEAD MACHINE SCREW		
Z	1F		N89-3008-45	BINDING HEAD TAPTITE SCREW		
R119			RD14GB2E270J	FL-PROOF RD 27 J 1/4W		
R121			RD14GB2E6R8J	FL-PROOF RD 6.8 J 1/4W		
R126,127			RD14GB2E561J	FL-PROOF RD 560 J 1/4W		
R128			RD14GB2E101J	FL-PROOF RD 100 J 1/4W		
R129			RD14GB2E221J	FL-PROOF RD 220 J 1/4W		
R132,133			RD14GB2E271J	FL-PROOF RD 270 J 1/4W		
VR1 ,2			R12-3128-05	TRIMMING POT.(22K) PB LEVEL		
VR3 ,4			R12-5071-05	TRIMMING POT.(220K)BIAS CURREN		
VR5 ,6			R12-3128-05	TRIMMING POT.(22K) REC LEVEL		
VR7			R10-4030-05	POTENTIOMETER		
VR8			R05-5021-05	POTENTIOMETER		
S1		*	S42-5051-05	MULTIPLE PUSH SWITCH		
S2			S40-2358-05	PUSH SWITCH (POWER TYPE)		
D17			1SS199	DIODE		
D18 -23			HSS104	DIODE		
D18 -23			1SS133	DIODE		
D24			HZS15N(B)	ZENER DIODE		
D24			RD15ES(B)	ZENER DIODE		
D25			HZS8.2N(B2)	ZENER DIODE		
D25			RD8.2ES(B2)	ZENER DIODE		
D26			S5566B	DIODE		
D27			KBP02ML-6127	DIODE		
D28			HZS5.1N(B2)	ZENER DIODE		
D28			RD5.1ES(B2)	ZENER DIODE		
IC1			UPC1228HA	IC(PREAMP FOR TAPE EQ X2)		
IC2			HA12088ANT	IC(DOLBY B/C NOISE REDUCTION)		
IC3			UPC1330HA	IC(2CH HEAD SWITCHING)		
IC4			M5218P	IC(OP AMP X2)		
IC4			NJM4565D	IC(OP AMP X2)		
IC5		*	AN7815F	IC(VOLTAGE REGULATOR/ +15V)		
IC5			UPC7815HF	IC(VOLTAGE REGULATOR/ +15V)		
IC6			AN6888	IC(5PT LED LEVEL METER DR X2)		
Q1 ,2			2SD1302(S,T)	TRANSISTOR		

E: Scandinavia & Europe **K**: USA **P**: Canada
U: PX(Far East, Hawaii) **T**: England **M**: Other Areas
UE: AAFES(Europe) **X**: Australia

⚠ indicates safety critical components.

www.hifiengine.com

PARTS LIST

⁎ New Parts
Parts without **Parts No.** are not supplied.
Les articles non mentionnes dans le **Parts No.** ne sont pas fournis.
Teile ohne **Parts No.** werden nicht geliefert.

Ref. No. 参照番号	Address 位置	New Parts 新	Parts No. 部品番号	Description 部品名／規格	Destination 仕向	Remarks 備考
Q3 ,4			2SC1845(F,E)	TRANSISTOR		
Q5 ,6			2SC1740S(Q,R)	TRANSISTOR		
Q5 ,6			2SC945(A)(Q,P)	TRANSISTOR		
Q7 ,8			2SC1845(F,E)	TRANSISTOR		
Q9 ,10			2SC1740S(Q,R)	TRANSISTOR		
Q9 ,10			2SC945(A)(Q,P)	TRANSISTOR		
Q11			2SD863(E,F)	TRANSISTOR		
Q12			2SD882	TRANSISTOR		
Q13			2SC1740S(Q,R)	TRANSISTOR		
Q13			2SC945(A)(Q,P)	TRANSISTOR		
Q14			2SA733(A)(Q,P)	TRANSISTOR		
Q14			2SA933S(Q,R)	TRANSISTOR		
Q15			2SC3246(H,J)	TRANSISTOR		
Q16 ,17			2SA733(A)(Q,P)	TRANSISTOR		
Q16 ,17			2SA933S(Q,R)	TRANSISTOR		
Q18 -21			2SC1740S(Q,R)	TRANSISTOR		
Q18 -21			2SC945(A)(Q,P)	TRANSISTOR		
MECHANISM ASS'Y (D40-0863-05)						
1	1B		A11-0231-08	CHASSIS		
3	2A		A53-0753-08	CASSETTE HOLDER		
7	2C		D01-0092-08	FLYWHEEL ASSY		
8	2B		D03-0261-08	REEL DISK ASSY		
9	1B		D03-0262-08	REEL DISK		
10	1B		D10-1942-08	LEVER (REC)		
11	1C		D10-1943-08	LEVER ASSY (PAUSE)		
14	1B		D10-1946-08	ARM (PAUSE LOCK)		
15	1A		D10-1947-08	ARM (REC SENSOR)		
16	1C		D10-1948-08	LEVER (PLAY)		
17	1C		D10-1949-08	LEVER (REW)		
18	1C		D10-1950-08	LEVER (FF)		
19	1C		D10-1951-08	LEVER (STOP)		
20	1C		D10-1952-08	LEVER (LOCK CAM)		
21	1B		D10-1953-08	LEVER (AUTO SENSOR)		
22	2B		D10-1954-08	LEVER (EJECT)		
23	1C		D10-1955-08	LEVER ASSY (LOCK CAM)		
24	1C		D10-1956-08	ARM (TRIGGER)		
25	1C		D10-1957-08	ARM (INTER LOCK)		
26	1C		D10-1958-08	ARM (TRIGGER)		
27	1C		D10-1959-08	ARM (AUTO)		
28	1C		D10-1960-08	ARM (AUTO LOCK)		
29	1B		D10-1961-08	ARM (SHIFT)		
30	2B		D10-1962-08	ARM ASSY (PLAY)		
31	1C		D12-0109-08	CAM (PAUSE)		
32	1C		D12-0119-08	CAM (AUTO)		
33	1C		D13-0615-08	GEAR (AUTO)		
34	2B		D13-0616-08	GEAR (PLAY)		
35	1B		D13-0617-08	GEAR (FF)		
36	1B		D13-0618-08	GEAR (ASSIST)		
37	2B		D14-0188-08	PINCH ROLLER ASSY		
38	2B		D15-0264-08	PULLEY (AUTO)		
39	2C		D16-0162-08	BELT (FR)		
40	2C		D16-0161-08	BELT (AUTO)		
41	1C	⁎	D16-0281-08	BELT (DRIVE)		
42	2B		D19-0095-08	CLUTCH ASSY		

E: Scandinavia & Europe **K**: USA **P**: Canada
U: PX(Far East, Hawaii) **T**: England **M**: Other Areas
UE : AAFES(Europe) **X**: Australia

⚠ indicates safety critical components.

www.hifiengine.com

PARTS LIST

⁎ New Parts
Parts without **Parts No.** are not supplied.
Les articles non mentionnes dans le **Parts No.** ne sont pas fournis.
Telle ohne **Parts No.** werden nicht geliefert.

Ref. No. 参照番号	Address 位置	New Parts 新	Parts No. 部品番号	Description 部品名／規格	Destination 仕向	Remarks 備考
43	2A		D21-1100-08	SHAFT (BUTTØN)		
44	2B		D23-0220-08	RETAINER		
45	2B		D39-0187-08	DAMPER ASSY		
52	2A	*	E31-7181-08	CØNNECTING WIRE(8P)HEAD		
51	1A	*	E31-7182-08	CØVER (SWITCH PRØTECTØR)		
61	2A		G01-1705-08	TØRSIØN CØIL SPRING(CASET HØLD		
62	1C		G01-2055-08	CØMPRESSIØN SPRING(PAUSE CAM)		
63	1C		G01-2206-08	CUSHIØN (MØTØR)		
64	1C		G01-2057-08	CØMPRESSIØN SPRING(LEVER)		
65	1C		G01-2058-08	CØMPRESSIØN SPRING(LEVER)		
66	1B		G01-2059-08	CØMPRESSIØN SPRING(AUTØ SENSØR		
67	1B		G01-2060-08	CØMPRESSIØN SPRING(REEL DISK)		
68	1C		G01-2061-08	CØMPRESSIØN SPRING(LEVER)		
69	2A		G01-2062-08	CØMPRESSIØN SPRING(R/P HEAD)		
70	1C		G01-2063-08	TENSIØN SPRING (LØCK CAM)		
71	1C		G01-2064-08	TENSIØN SPRING (ARM)		
72	2A		G01-2065-08	TENSIØN SPRING (SHIFT ARM)		
73	2B		G01-2093-08	TENSIØN SPRING (EJECT)		
74	1C		G01-2067-08	TØRSIØN CØIL SPRING(TRIGER ARM		
75	1C		G01-2068-08	TØRSIØN CØIL SPRING(AL ARM)		
76	2B		G01-2069-08	TØRSIØN CØIL SPRING(PLAY ARM)		
77	1B		G01-2070-08	TØRSIØN CØIL SPRING(SHIFT ARM)		
78	2A		G01-2071-08	TØRSIØN CØIL SPRING(PR)		
79	2A		G02-0194-08	FLAT SPRING (CASET CLAMP)		
80	1B		G02-0419-08	FLAT SPRING		
83	2B	*	G01-2401-08	CØMPRESSIØN SPRING		
84	1C		G01-2207-08	TENSIØN SPRING (EJECT)		
85	1A	*	J11-0154-08	CØLLER (BUTTØN)		
86	1B		J11-0097-08	WIRE CLAMPER		
87	1A		J19-2833-08	BRACKET (REC SW)		
88	2B		J19-2834-08	HØLDER (BUTTØN)		
89	2A		J19-2835-08	HØLDER (HEAD)		
90	2C		J21-5046-08	MØUNTING HARDWARE(MØTØR)		
92	1B,1C		J42-0133-08	BUSHING		
–			J61-0307-05	WIRE BAND		
103	2B		N10-2020-46	NUT (M2)		
104	2C		N19-0524-04	FLAT WASHER (Ø2.1)		
106	1B,2B		N19-1031-08	FLAT WASHER (Ø1.6)		
107	2B		N19-1036-08	FLAT WASHER (Ø1.6)		
108	2B	*	N19-1215-08	FLAT WASHER		
109	1B		N19-1080-08	FLAT WASHER (REEL)		
110	2B		N19-1081-08	FLAT WASHER (Ø2.1)		
112	2B		N19-1083-08	FLAT WASHER (Ø1.2)		
113	1B	*	N09-1034-08	STEPPED SCREW (MØTØR)		
114	1B	*	N19-1216-08	FLAT WASHER (T REEL SLIDER)		
115	2C		N19-1198-08	FLAT WASHER		
A	1A,2A		N09-1496-08	TAPTITE SCREW (Ø2X4)		
B	1C		N09-1507-08	STEPPED SCREW		
D	1B		N09-1675-08	TAPTITE SCREW (Ø2.6X5)		
E	2B		N09-1808-08	TAPTITE SCREW (Ø2X14)		
F	2B		N09-1809-08	TAPPING SCREW (Ø2X6)		
G	2A		N09-1810-08	SCREW (Ø2X6)		

E: Scandinavia & Europe **K**: USA **P**: Canada
U: PX(Far East, Hawaii) **T**: England **M**: Other Areas
UE : AAFES(Europe) **X**: Australia

⚠ indicates safety critical components.

www.hifiengine.com

PARTS LIST

⁎ New Parts
Parts without **Parts No.** are not supplied.
Les articles non mentionnes dans le **Parts No.** ne sont pas fournis.
Telle ohne **Parts No.** werden nicht geliefert.

Ref. No. 参照番号	Address 位置	New Parts 新	Parts No. 部品番号	Description 部品名／規格	Destination 仕向	Remarks 備考
H	2A		N35-2008-46	LEAF SWITCH (PLAY)		
J	2C		N09-2660-08	SCREW (Ø2.6X3)		
S3	1A		S46-1088-08	LEAF SWITCH (REC)		
S4	2A		S46-1111-08	ERASE HEAD		
S5	1B		S46-1099-08	LEAF SWITCH (POWER)		
124	2A	⁎	T32-0315-08	REC/PLAY HEAD		
126	2A	⁎	T34-0331-08	ERASE HEAD (DUMMY)		
M1	2C	⁎	T42-0536-08	MOTOR		

E: Scandinavia & Europe **K**: USA **P**: Canada
U: PX(Far East, Hawaii) **T**: England **M**: Other Areas
UE : AAFES(Europe) **X**: Australia

⚠ indicates safety critical components.

www.hifiengine.com

SPECIFICATIONS

Type	Stereo cassette deck with Dolby B-C NR system
Track System	4-track, 2-channel stereo, recording/playback
Recording System	AC Bias System (Bias frequency: 105 kHz)
Erasing System	AC System
Tape Speed	4.76 cm/sec (1-7/8 ips)
Heads	Record and Playback Head × 1
	Erase Head × 1
Motor	Electronically controlled DC motor
Fast Winding Time	Approx. 110 seconds with C-60 tape
Frequency Response: (±6 dB) – 20 dB recording	
Normal Tape	20 Hz to 15,000 Hz
CrO_2 Tape	20 Hz to 16,000 Hz
Metal Tape	20 Hz to 16,000 Hz
Signal-to-Noise Ratio:	
Dolby C Type NR ON	72 dB (Normal Tape)
Dolby B Type NR ON	65 dB (Normal Tape)
Dolby NR OFF	56 dB (Normal Tape)
Harmonic Distortion	Less than 0.9% (at 1 kHz, 0 dB with Normal Tape)
Wow and Flutter	0.15% (W.R.M.S) ±0.3% (DIN)
Input Sensitivity/Impedance:	
LINE IN	77.5 mV/50 kohms
Microphone	0.8 mV/4.7 kohms
Output Level/Impedance:	
LINE OUT	270 mV/3.9 kohms
Headphones	0.2 mV/8 ohms
GENERAL	
Power Consumption	15 W
Dimensions	W: 440 mm (17-5/16″)
	H: 119 mm (4-11/16″)
	D: 270 mm (10-5/8″)
Weight	3.7 kg (8.2 lb)

Note:

Kenwood follows a policy of continuous advancements in development. For this reason specifications may be changed without notice.

Kenwood follows a policy of continuous advancements in development.
For this reason specifications may be changed without notice.
DOLBY and the double-D symbol are trademarks of Dolby Laboratories Licensing Corporation.
Noise reduction circuit made under license from Dolby Laboratories Licensing Corporation.

Kenwood poursuit une politique de progrès constants en ce qui concerne le développement.
Pour cette raison, les spécifications sont sujettes à modifications sans préavis.
La marque DOLBY et le double "D" sont des marques déposées des Dolby Laboratories.
Le système de réduction du bruit de fond est fabriqué sous license des Dolby Laboratories.

Kenwood strebt ständige Verbesserungen in der Entwicklung an.
Daher bleiben Änderungen der technischen Daten jederzeit vorbehalten.
DOLBY und Doppel-D-Symbol sind eingetragene Warenzeichen der Dolby Laboratories.
Dolby-Rauschunterdrückung mit Lizenz der Dolby Laboratories gefertigt.

Accessories

Audio cord 2

Note:

Component and circuitry are subject to modification to insure best operation under differing local conditions. This manual is based on the U.S. (K) standard, and provides information on regional circuit modification through use of alternate schematic diagrams, and information on regional component variations through use of parts list.

KENWOOD CORPORATION
Shionogi Shibuya Building, 17-5, 2-chome Shibuya, Shibuya-ku, Tokyo 150, Japan

KENWOOD U.S.A. CORPORATION
2201 East Dominguez Street, Long Beach, CA 90810;
550 Clark Drive, Mount Olive, NJ 07828, U.S.A.

KENWOOD ELECTRONICS CANADA INC.
P.O. Box 1075 959 Gana Court, Mississauga, Ontario, Canada L4T 4C2

KENWOOD ELECTRONICS BENELUX N.V.
Mechelsesteenweg 418 B-1930 Zaventem, Belgium

KENWOOD ELECTRONICS DEUTSCHLAND GMBH
Rembrücker-Str. 15, 6056 Heusenstamm, West Germany

TRIO-KENWOOD FRANCE S.A.
Hi-Fi·VIDEO·CAR Hi-Fi
13, Boulevard Ney, 75018 Paris, France

TRIO-KENWOOD U.K. LTD.
17 Bristol Road, The Metropolitan Centre, Greenford, Middx. UB6 8UP England

KENWOOD ELECTRONICS AUSTRALIA PTY. LTD.
4E Woodcock Place, Lane Cove, N.S.W. 2066, Australia

KENWOOD & LEE ELECTRONICS, LTD.
Wang Kee Building, 4th Floor, 34-37, Connaught Road, Central, Hong Kong

www.hifiengine.com