SERIAL NO. 3182

ONKYO SERVICE MANUAL

STEREO CASSETTE TAPE DECK

MODEL TA-2026

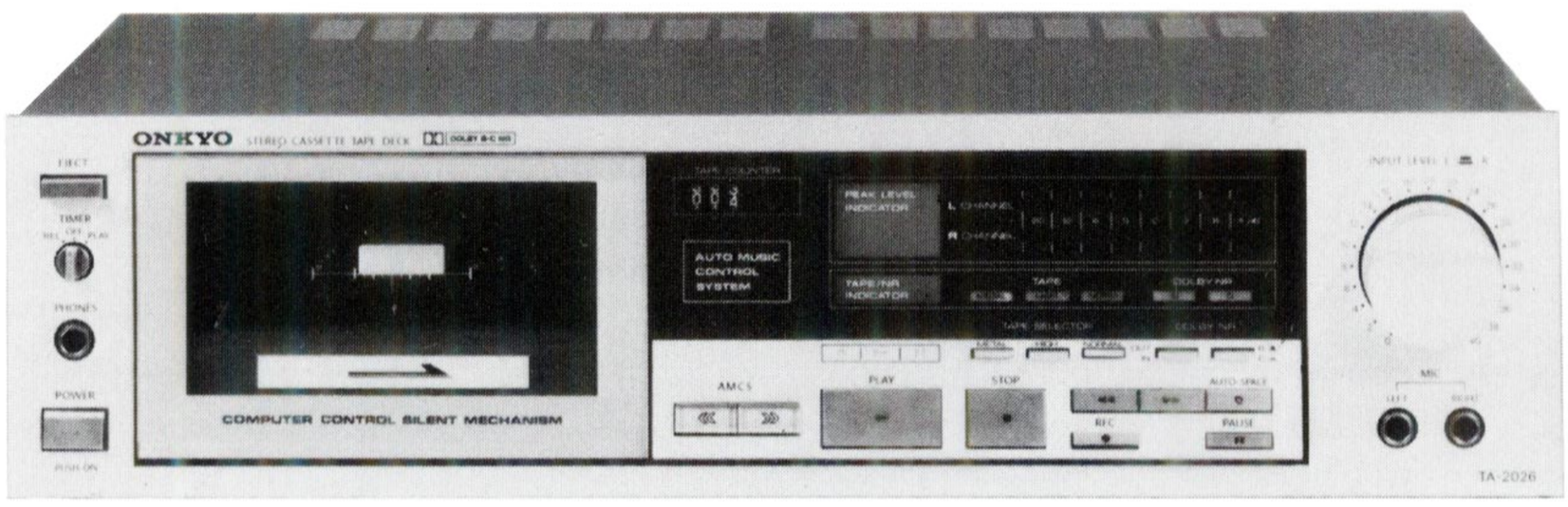

Black and silver models

SAFETY-RELATED COMPONENT WARNING!!

COMPONENTS IDENTIFIED BY MARK ⚠ ON THE SCHEMATIC DIAGRAM AND IN THE PARTS LIST ARE CRITICAL FOR RISK OF FIRE AND ELECTRIC SHOCK. REPLACE THESE COMPONENTS WITH ONKYO PARTS WHOSE PARTS NUMBERS APPEAR AS SHOWN IN THIS MANUAL.

MAKE LEAKAGE-CURRENT OR RESISTANCE MEASUREMENTS TO DETERMINE THAT EXPOSED PARTS ARE ACCEPTABLY INSULATED FROM THE SUPPLY CIRCUIT BEFORE RETURNING THE APPLIANCE TO THE CUSTOMER.

ONKYO®
AUDIO COMPONENTS

SPECIFICATIONS

Track Format:	4 tracks, 2 channels
Erasing System:	AC erase
Tape Speed:	4.8 cm/sec. (1-7/8 i.p.s.)
Wow & Flutter:	0.05% (WRMS)
Frequency Response:	20–15,000 Hz (30–14,000 Hz ± 3dB) (normal position tape) 20–16,000 Hz (30–15,000 Hz ± 3 dB) (high position tape) 20–17,000 Hz (30–16,000 Hz ± 3 dB) (metal position tape)
Signal-to-Noise Ratio:	60 dB (metal position tape, Dolby NR out) A noise reduction of 10 dB above 5 kHz and 5 dB at 1 kHz is possible with Dolby B NR. A noise reduction of 20 dB at 5 kHz is possible with Dolby C NR.
Input Jacks:	Mic Jacks: 2 Input sensitivity: 0.3 mV/600 ohms Input impedance: 2.7 kohms Line IN: 2 Input sensitivity: 60 mV Input impedance: 50 kohms

www.hifiengine.com

Outputs:	Line OUT: 2 Std output level: 500 mV (0 dB) Opt load impedance: over 50 kohms Headphone Jack: 1 Opt load impedance: 8–200 ohms
Motor:	DC servo motor: 1
Heads:	Rec/PB head: Special Hard Permalloy Erase head: Ferrite
Semiconductors:	TR: 42 Diodes: 21 IC: 10 LED: 10
Power Supply:	AC 120V/60 Hz
Power Consumption:	22 watts
Dimensions:	418(W) x 112(H) x 270(D) mm (16-1/2" x 4-3/8" x 10-5/8")
Weight:	4.5 kg (9.9 lbs.)

Specifications and external appearance are subject to change without notice because of product improvements.

SERVICE PROCEDURES

1. Replacing the lamp

This unit used the lamp listed below.

Circuit No.	Parts No.	Description
PL-601	210090	PL14V 150mA

Caution; Before replacing the lamp. Be sure to unplug the power supply cable.

2. Instruction resistance measurement

Connect the insulating-resistance tester between the plug of power supply cord and chassis.

Specifications; 500V more than 10MΩ

3. Replacing the Hall ICs

Cautions: As the position of leg of DN6838 and DN838 differ, use the same Hall IC when replacing.

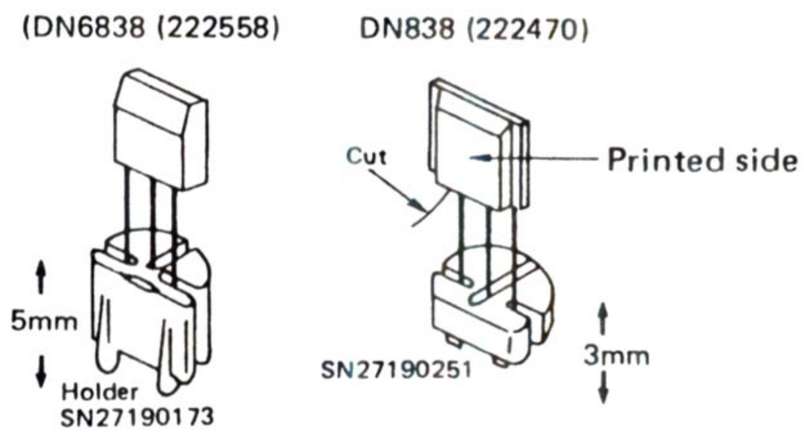

NATD-2004

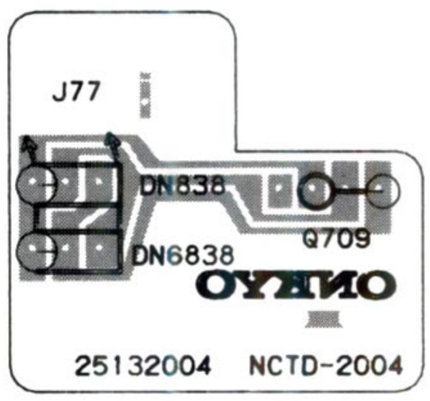

MICROCOMPUTER OPERATION TIMING

1. Start of Cue/Rewind (Auto Search and song location)

When the auto search (in the FF or REW direction) or the FF or REW button (for song location) is pressed, the FF or REW and Cue/Review solenoids are both switched on simultaneously 300 msec. after the play solenoid has been switched on.

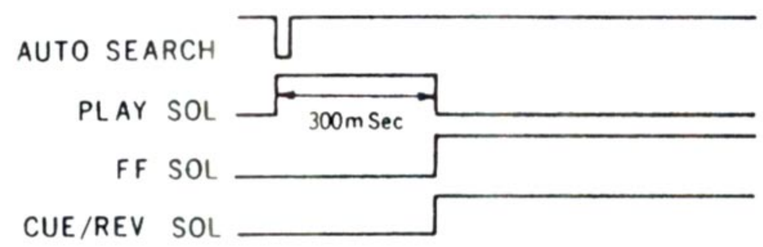

2. Song Location with Cue (AMCS in FF direction and song skip song location)

When the beginning of the desired song is detected, the deck is switched to the stop mode for 300 msec. and, in order to return to the beginning of the song, review operation is performed. When the beginning is located, the deck is again switched to the stop mode for 300 msec. and then switched to the play mode. 500 msec. after play has begun, muting on line out is switched off. If the beginning of the song is not located during review operation, the deck is switched to the play mode 500 msec. later.

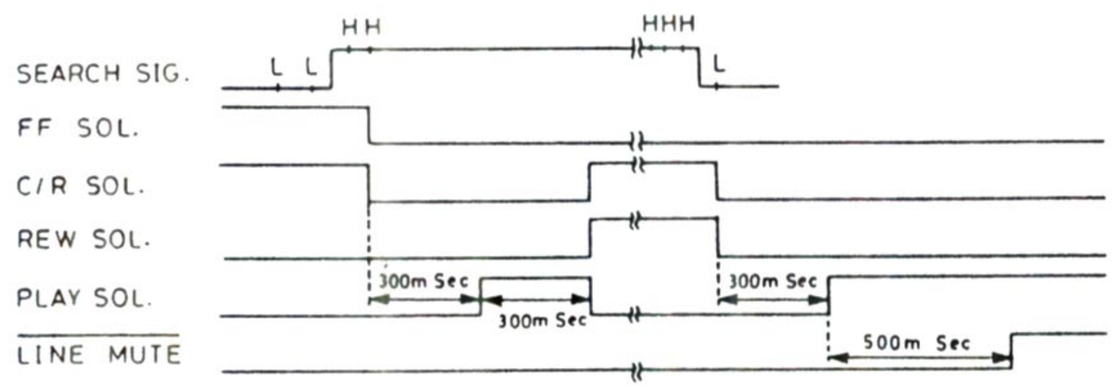

3. Song Location with Review (AMCS in REW direction and song skip song location)

When the beginning of the desired song is detected, the deck is switched to the stop mode for 300 msec. and then switched to the play mode. 500 msec. after play has begun, muting on line out is switched off.

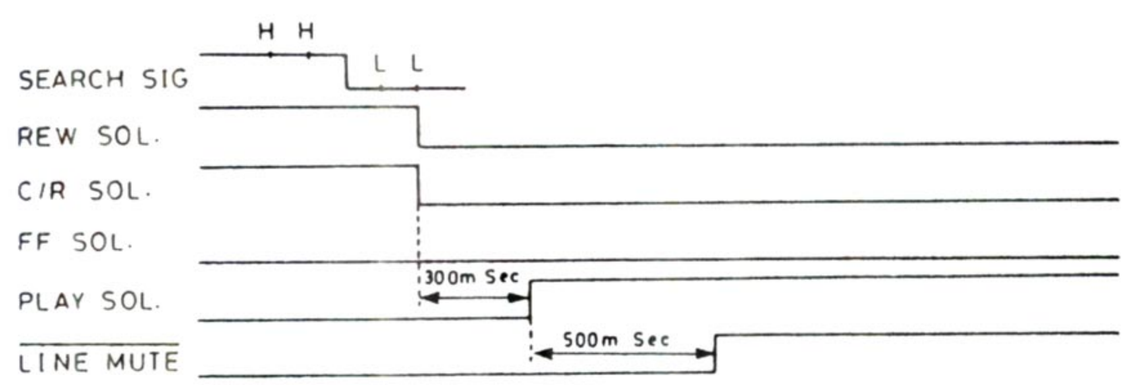

www.hifiengine.com

PACKING VIEW

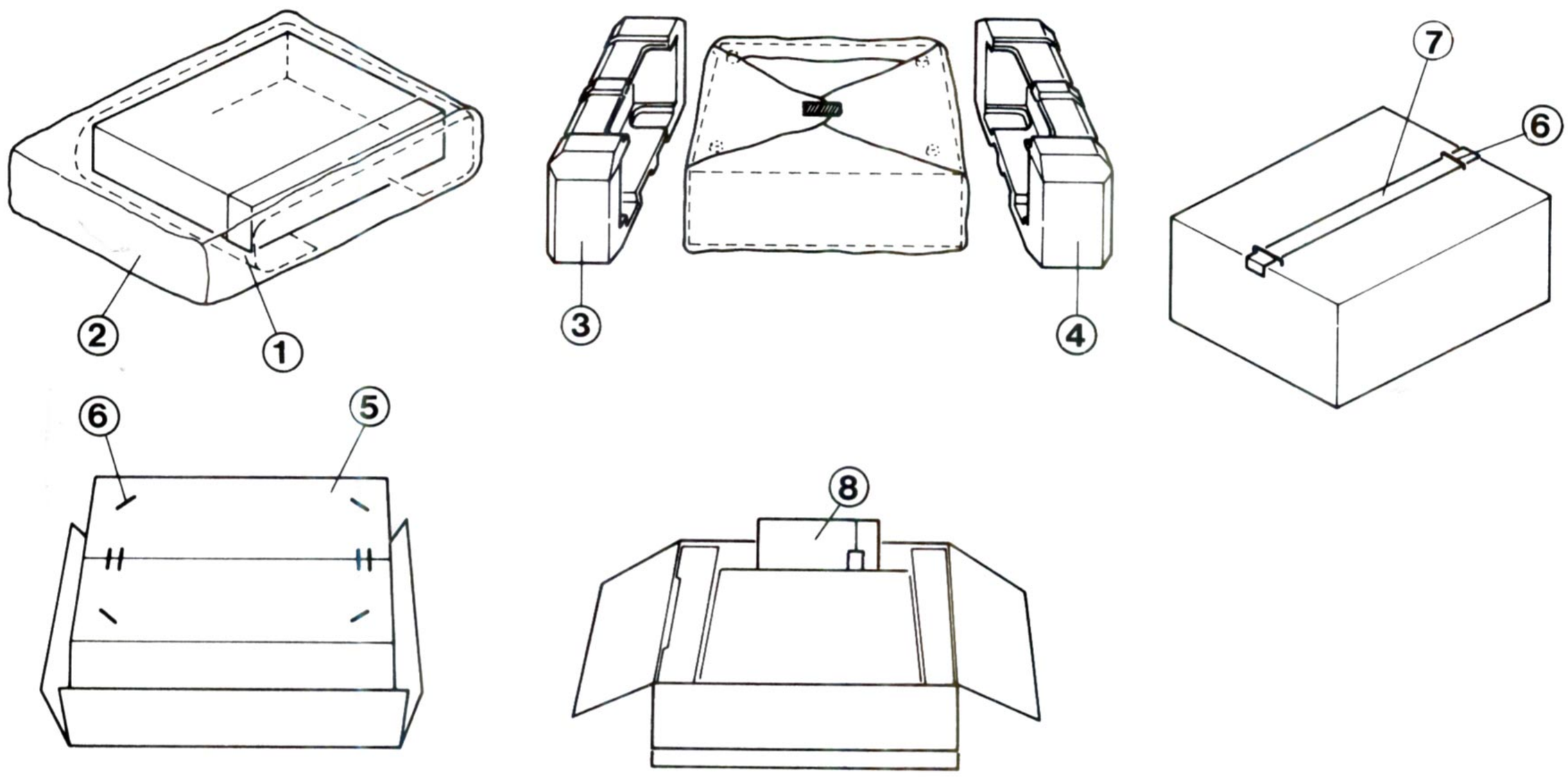

D MODEL

REF. NO.	PART NO.	DESCRIPTION
1	29095012-1	500x800 Protection sheet (B)
2	29100063	500x750 Poly bag
3	29090746	Pad (L)
4	29090747	Pad (R)
5	29050951	Master caton box
	29050952	Master caton box (B)
6	282301	Sealing hook
7	260012	Damplon tape
8	Accessary bag ass'y	
	29340790	Instruction manual
	2010095	Connection cable
	29365006-5	Waranty card (N)
	29358002A	Service station list (N)
	29100005	220x330 Poly bag

G/W MODEL

REF. NO.	PART NO.	DESCRIPTION
1	29095012-1	500x800 Protection sheet (B)
2	29100063	500x750 Poly bag
3	29090746	Pad (L)
4	29090747	Pad (R)
5	29050951	Master caton box
	29050952	Master caton box (B)
6	282301	Sealing hook
7	260012	Damplon tape
8	Accessary bag ass'y	
	29340791	Instruction manual (G)
	2010095	Connection cable
	25055040	Conversion plug CV-K-2 (G)
	29100005	220x330 Poly bag

NOTE (N) : Only U.S.A. Model
(G) : Only 120/220V Model
(B) : Black Model

www.hifiengine.com

CHASSIS EXPLODED VIEW

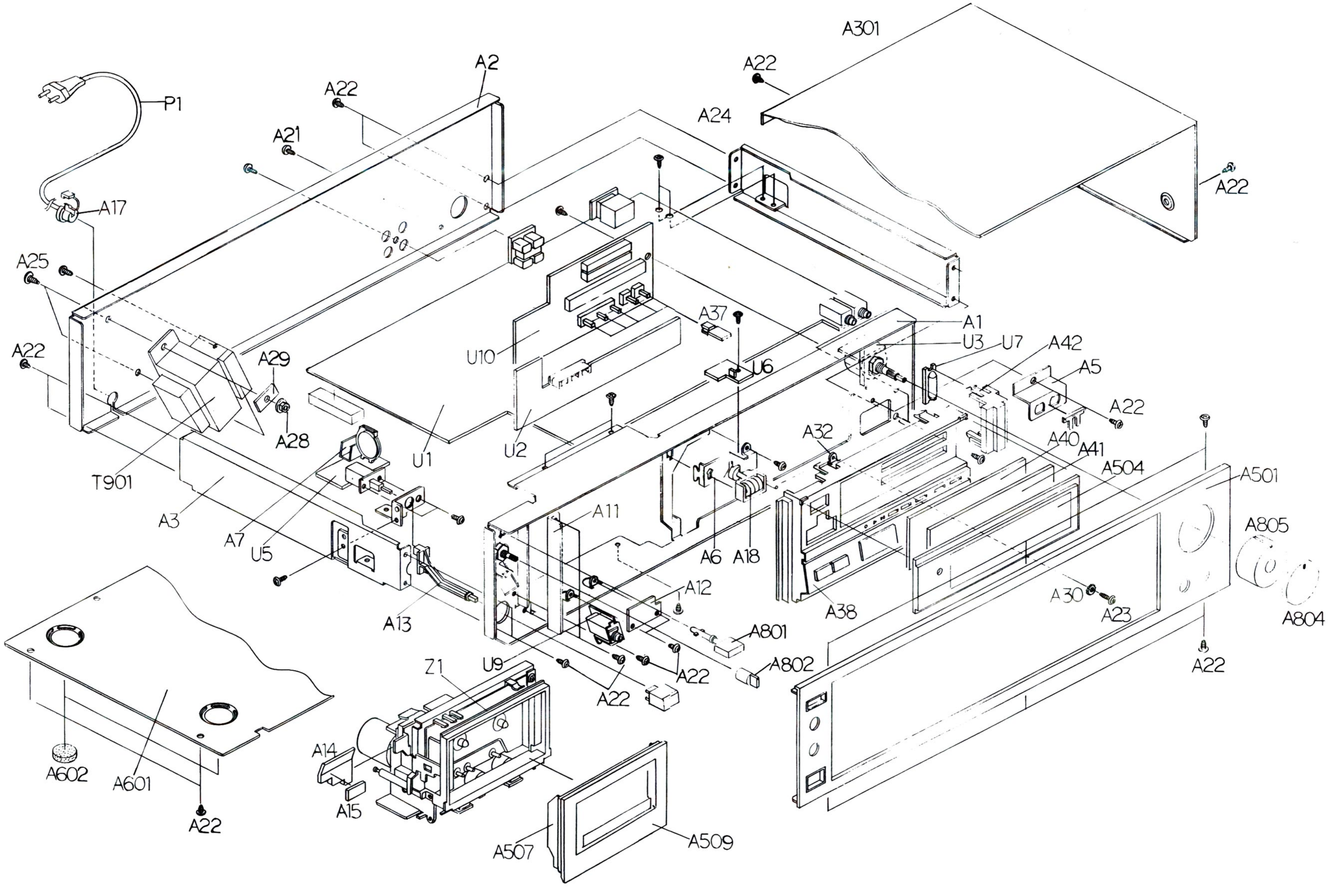

www.hifiengine.com

CHASSIS EXPLODED VIEW-PARTS LIST

REF. NO.	PART NO.	DESCRIPTION
A1	27110219	Front bracket
A2	27120612A	Back panel (D)
	27120613A	Back panel (G)
	27120615A	Back panel (W)
A3	27115130A	Side bracket
A4	27140896	Bracket, headphone
A5	27140706	Bracket, microphone
A6	27140897	Bracket, counter
A7	28175104	Insulating plate (G)
A11	28400098B	Plate
A12	28175075	Insulating plate
A13	27273030B	Joint (L)
A14	27273024	Joint
A15	27270117	Spacer
A16	28140553	60x10x13mm, Cushion
A17	270025	SR-3PM, Strainrelief (D)
	270280	SR-4K-4, Strainrelief (G/W)
A18	24601163	Counter
A19	28140552	28x28x0.5mm, Cushion
A21	834230108	3TTS+10B (Ni), Nickel screw
A22	834420068	3TTS+6B (BC), Tapping screw
A23	834420108	3TTS+10B (BC), Tappong screw
A24	831130088	3TTW+8B (BC), Tappong screw
A25	838440109	4TTB+10C (BC), Tapping screw
A26	82142604	2.6P+4F (BC), Pan head screw
A27	82143006	3P+6FN (BC), Pan head screw
A28	86414010	FWN4x10FN, Flange nut
A29	870065	Special washer
A30	87313006	M-3B, Toothed washer
A32	28321531B	Knob ass'y (S)
	28321532B	Knob ass'y (B)
A37	28321542	Knob, selector (S)
	28321543	Knob, selector (B)
A38	27262290A	Plate (S)
	27262290A	Plate (B)
A40	28133099	Back plate
A41	28130214	Dial plate
A42	27190276	Holder, lamp
A61	834430108	3TTW+10B (BC), Tappling screw (G)
A62	82143006	3P+6FN (BC), Pan head screw for voltage selector switch (W)
A301	28184193	Top cover (S)
	28184192	Top cover (B)

REF. NO.	PART NO.	DESCRIPTION
A501	11308121	Front panel ass'y (S)
A502	27267216	Guide, eject
A503	27267215	Guide, power
A501	11328121	Front panel ass'y (B)
A502	27267273	Guide, eject
A503	27267272	Guide, power
A504	28191254A	Clear plate
A507	28400182	Cassette lid ass'y (S)
A509	28400184A	Window
	28400183	Cassette lid ass'y (B)
	28400185A	Window
A601	27170155A	Bottom board
A602	27175028	Leg
A701	834430068	3TTS+6B (BC), Tappong screw
A801	28320856	Knob, eject (S)
A801	28321165A	Knob, eject (B)
A802	28320797	Knob, selector (S)
	28321130	Knob, selector (B)
A803	28320852	Knob, power (S)
	28321160	Knob, power (B)
A804	28320671	Knob L (S)
	28321711	Knob L (B)
A805	28320672A	Knob R (S)
	28321712	Knob R (B)
⚠ P1	253098B	AS-UC-3, Power supply cord (D)
	253083-1	AS-CEE, Power supply cord (G/W)
P2	260208	Binder
⚠ S902	25065123	NSS-1258P, Voltage selector switch (W)
⚠ T901	230811	NPT-839D, Power transformer (D)
	230799	NPT-839G, Power transformer (G)
	230800	NPT-839DG, Power transformer (W)
U1	11308599D	NAAF-1999d, Rec./pb amplifier pc board ass'y (D)
	11314599F	NAAF-1999f, Rec./pb amplifier pc board ass'y (G/W)
U2	11308500A	NASW-2000a, Control switch pc board ass'y
U3	11228501	NAVR-2001, Input volume pc board ass'y
U4	11228502	NASW-2002, Timer switch pc board ass'y
⚠ U5	11228503	NASW-2003, Power switch pc board ass'y

REF. NO.	PART NO.	DESCRIPTION
U6	11228504	NATD-2004, Holl IC pc board ass'y
U7	11228505	NAPL-2005, Edge light pc board ass'y
U9	11228507	NAHP-2007, Headphone terminal pc board ass'y
U10	11228508	NADIS-2008, Display pc board ass'y
Z1	244064	NDM-56, Cassette mechanism ass'y

NOTE: THE COMPONENTS IDENTIFIED BY MARK ⚠ ARE CIRTICAL FOR LISK OF FIRE AND ELECTRIC SHOCK. REPLACE ONLY WITH PARTS NUMBER SPECIFIED.

www.hifiengine.com

TAPE MECHANISM PARTS LIST

REF. NO.	PARTS NO.	DESCRIPTION
1	24610913	Tab detection lever
2	24610914	Rec. detection lever
3	24611014	Cassette holder ass'y
4	24605399	Spring for cassette holder
5	24607025	Eject arm
6	24604048	Spacer
7	82113006	3x6mm, Machine screw
8	24610912	Plate
9	801293	Tapping screw
10	24600040	Rec/pb head
11	24600032	Erase head
12	801291	Screw for head attachment
13	24605387	Spring for head azimuth
14	24604049	Spacer for head
15	24610923	Holder for head
16	24602211	Reel ass'y, supply
17	24602256	Reel ass'y, take-up
18	24610924	Washer, poly slider
19	24610921	Holder, spring
20	24610916	Head base
21	24607018	Brake arm L
22	24607019	Brake arm R
23	24605437	Spring, brake
24	24610917	Lock lever
25	24605438	Spring
26	870104	Washer for pinch arm lock
27	24602214	Pinch roller ass'y
28	24605439	Spring for pinch roller
29	24605440	Spring for switching arm
30	24610918	Counter belt
31	24605441	Spring, assist
32	24610926	Sheet, oil
33	801176	2.6x4, Screw with washer
34	24605442	Back tension spring
35	24602213	Idler gear
36	801177	2.6x5, Screw with washer
37	833130057	3x5, Tapping screw
38	833120127	2x12, Tapping screw
39	24605443	Spring, eject arm
40	24610919	Chassis ass'y
41	24605444	Cassette holding spring
42	24606156	Solenoid ass'y
43	24610920	Clutch ass'y
44	24606150	Solenoid
45	24610834	Dumper ass'y
46	24607020	Swithing arm FR
47	24602186	Sub belt
48	24602215	Main belt
49	24606158	Solenoid ass'y, playback
50	24607021	Arm, play
51	24605445	Spring for play arm
52	24602216	Idler ass'y
53	24605446	Spring for idler
54	24607022	Bracket, door
55	24607023	Bracket, dumper
56	24605447	Spring for head base
57	24605448	Spring for assist base
58	24610992	Base, assist
59	24602217	Gear, play
60	870094	Washer
61	24604051	Collar, flywheel
62	24605449	Spring, flywheel
63	24602218	Flywheel ass'y
64	24604050	Spacer
65	2000234	Wire connector
66	24607024	Bracket, motor
67	24602231	Belt, counter
68	24601132 or 24601150	Motor
69	24606178	Panel wire
70		Connector
71		Connector wire
72	25035389	Tact switch
73		Connector
74		Cable
75	24610977	Cushion
76	893015	E 1.5, circlip
77	24610840	Wasger

www.hifiengine.com

TAPE MECHANISM-EXPLODED VIEW

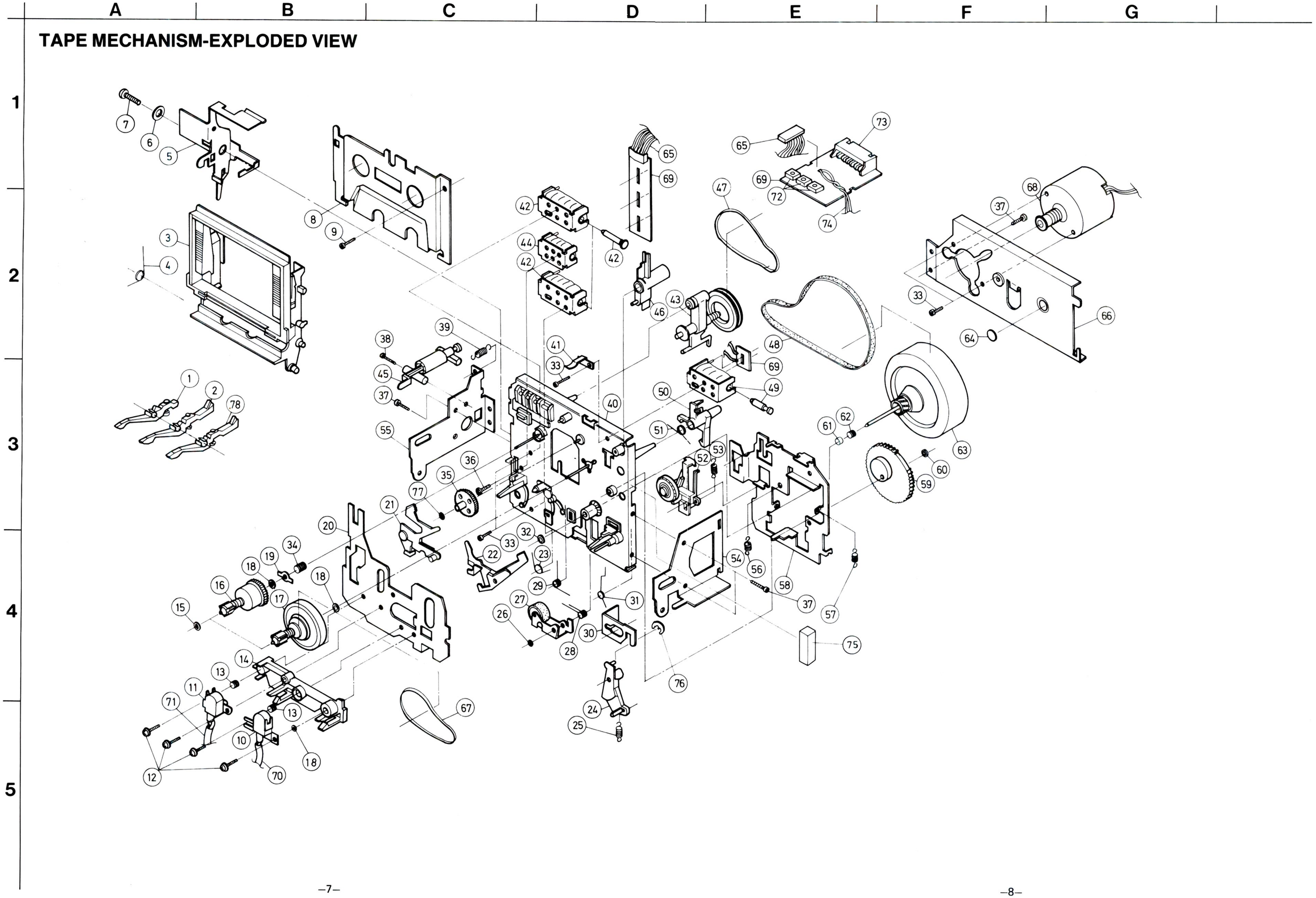

ADJUSTMENT PROCEDURES

PRECAUTIONS

1. Before adjustment, clean the following parts with an alchol moinstend swab.
   * record/playback head * erase head
   * pinch roller * capstan
2. Do not use magnetized screwdriver for adjustments.
3. Demagnetize record/playback head with a head demagnetizer.

TEST EQUIPMENT/TOOLS REQUIRED:

Audio oscillator
Digital frequency counter
Oscilloscope
Attenuator
AC voltmeter
Non-magnetic screw driver
Blank tapes (completely erased)
NORMAL ..... NEW UD90
HIGH ..... NEW XL-II90
METAL ..... NEW MX60
Test tapes
VTT-658 : 10 KHz, –15dB
MTT-111 : 3 kHz, – 10dB
MTT-150 : Dolby level calibration 400Hz, tone 200nWb/m

	Item	Connection of instrument	Line input	Test tape	Mode	Output indicator	Adjustment point	Adjust	Remarks
1	Tape speed	Frequency counter to LINE output terminal		MTT-111	PB	Frequency counter	Semi-fixed on the moter	3,010 to 3,020Hz	
2	Head azimuth	AC voltmeter and oscilloscope to LINE output terminal		VTT-658	PB	AC voltmeter	Head azimuth screws	Maximum and same phase at channels L and R.	See fig. 1 Set the semi-fixed resistors R129 and R130 to center position.
3	Playback level	AC voltmeter to terminals TP-101 and TP-102		MTT-150	PB	AC voltmeter	R129 (Ch. L) R130 (Ch. R)	580mV	
4	Bias current	Fig. 2	1kHz, –20dB and 12kHz, –20dB	NEW XL-II 90	REC/ PB	AC voltmeter	R439 (Ch. L) R440 (Ch. R)	Same level at REC/PB	INPUT VOLUME ..... maximum
5	Record level	Fig. 2	1kHz		REC PAUSE	AC voltmeter	Attenuator or AF OSC output	350mV	INPUT VOLUME ..... maximum
					REC/PB	AC voltmeter	R401, R402	Same level at REC/PB.	
6	**Clock adjustment** Connect the frequency counter via the resistor 100 kΩ to the terminal TP701 on the control pc board. Adjust the R701 so that the frequency counter indication becomes 170 ± 10 kHz.								

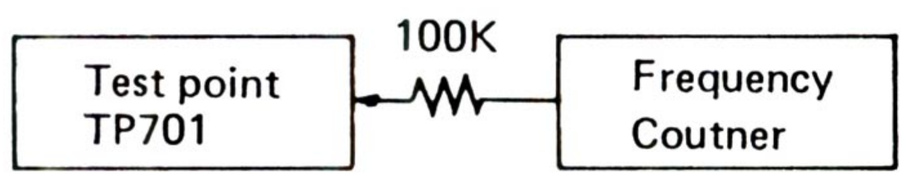

PLAY torque ..... 35 ~ 55gcm
FF, REW torque ..... 70 ~ 130gcm

www.hifiengine.com

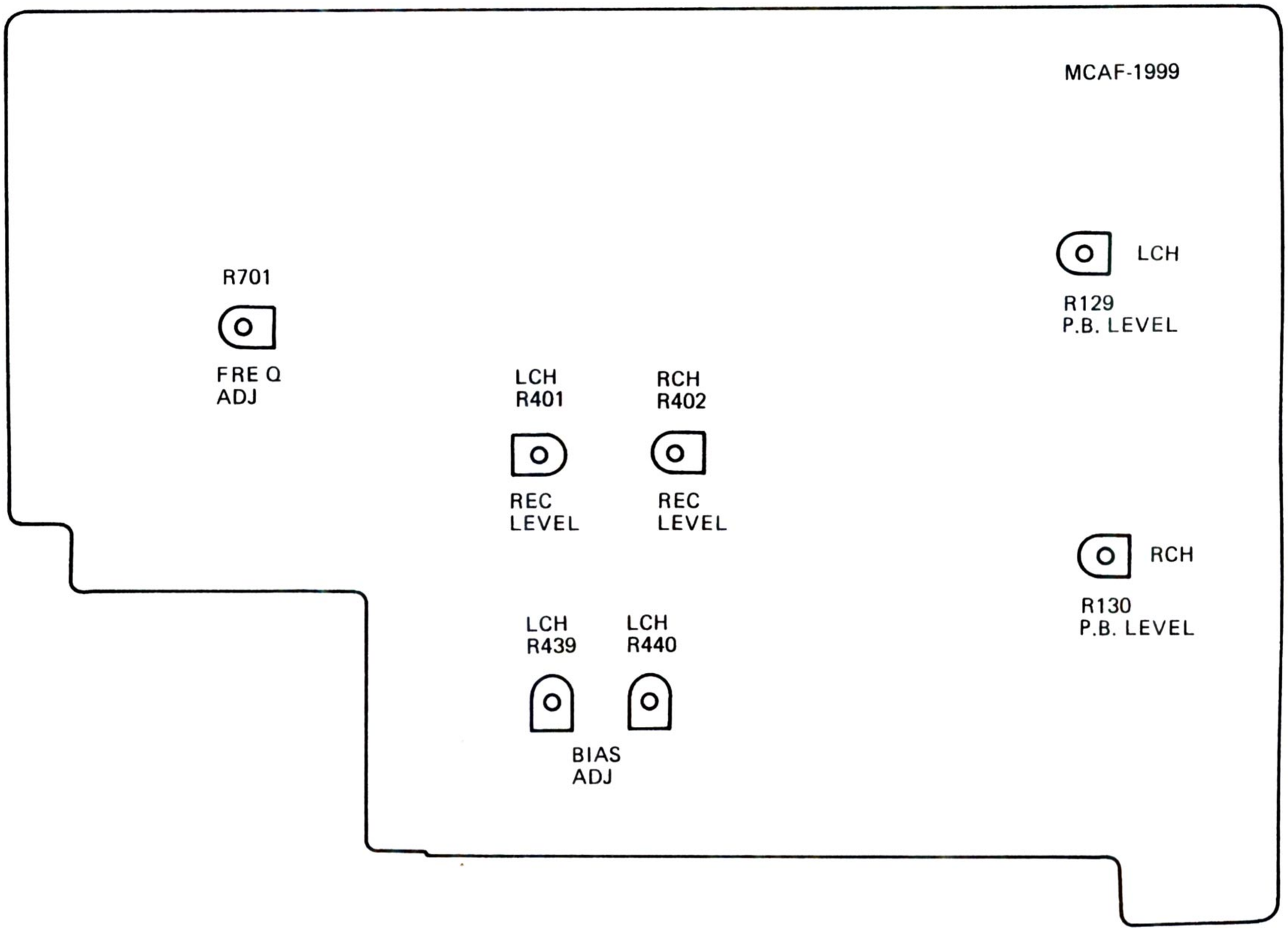

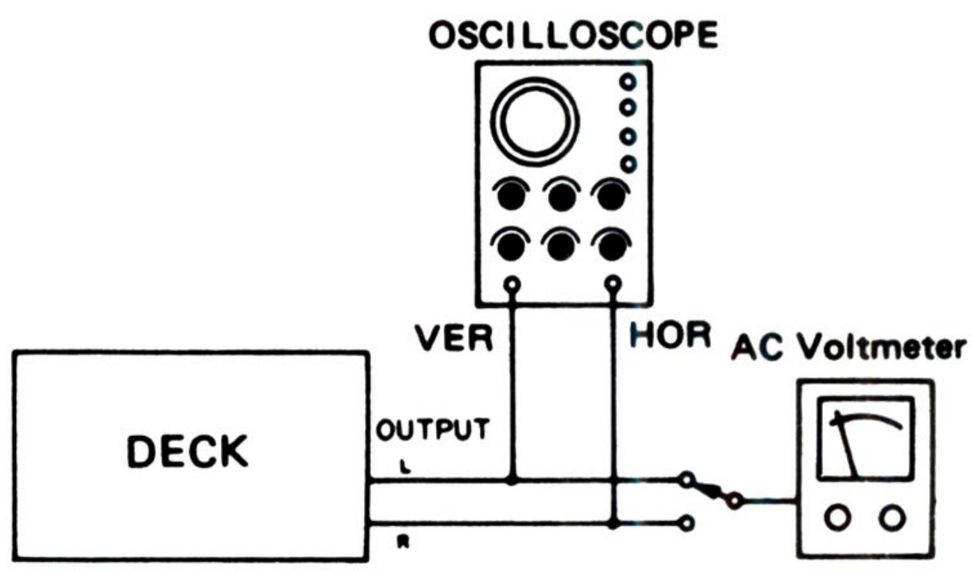

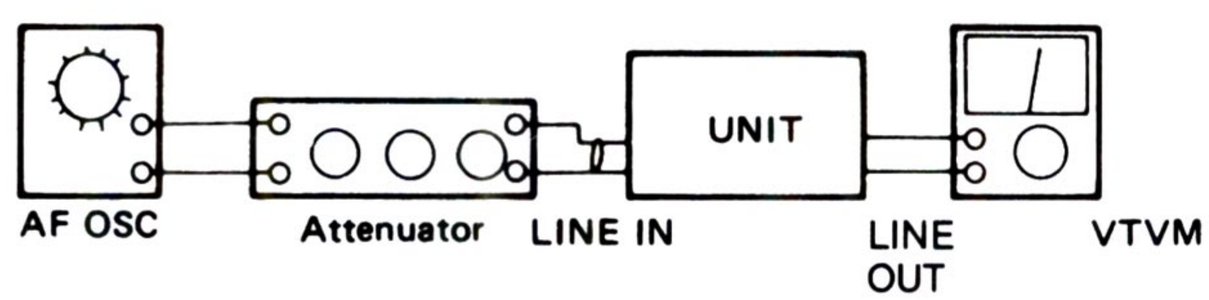

fig-2

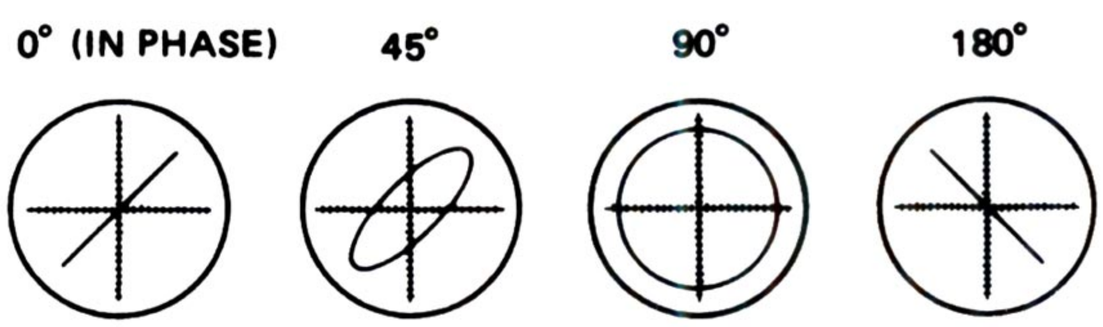

Confirming phase relationship

fig-1

www.hifiengine.com

BLOCK DIAGRAM

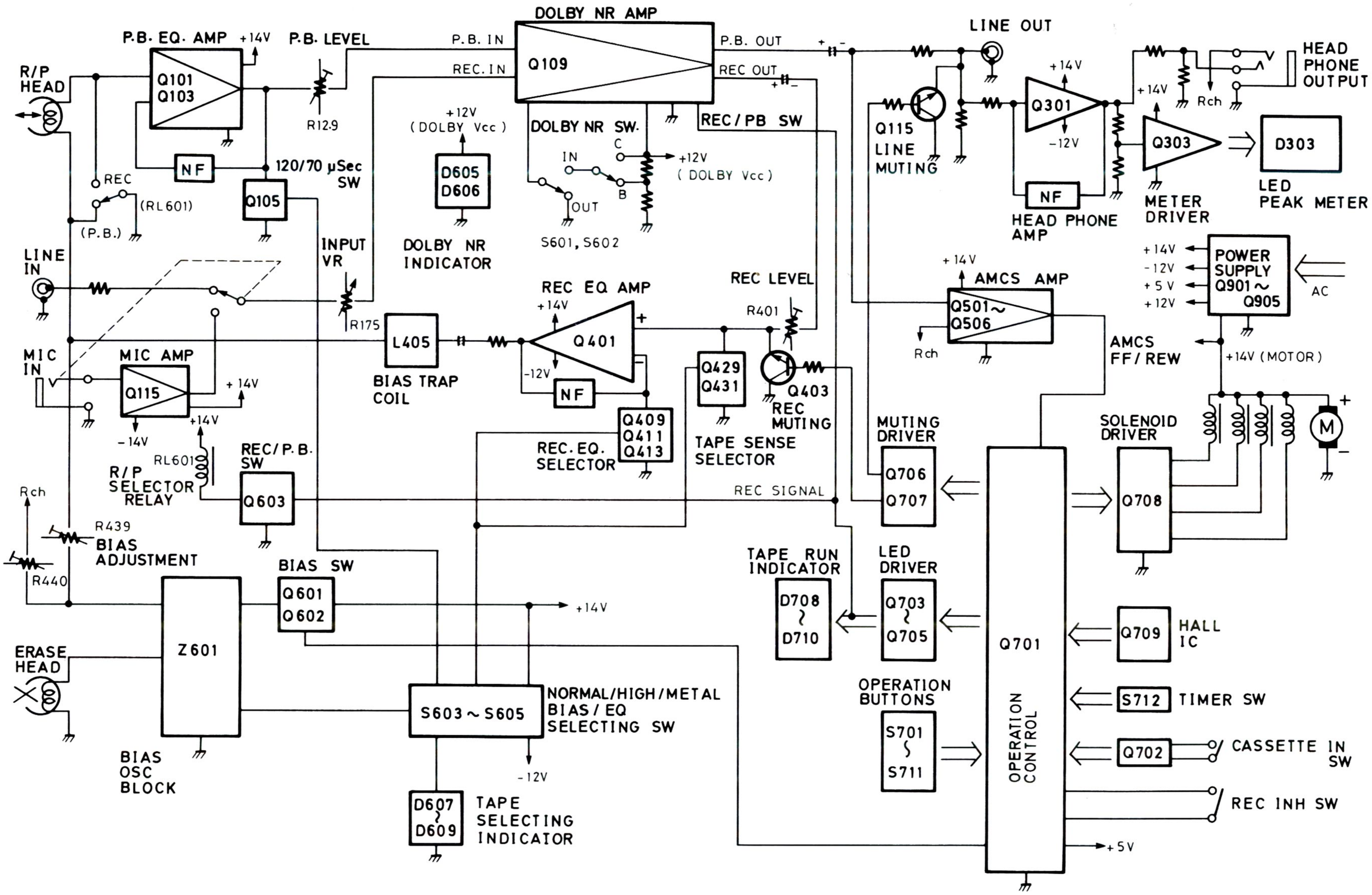

IC BLOCK DIAGRAM

LM6405L-233 (MICROCOMPUTER)

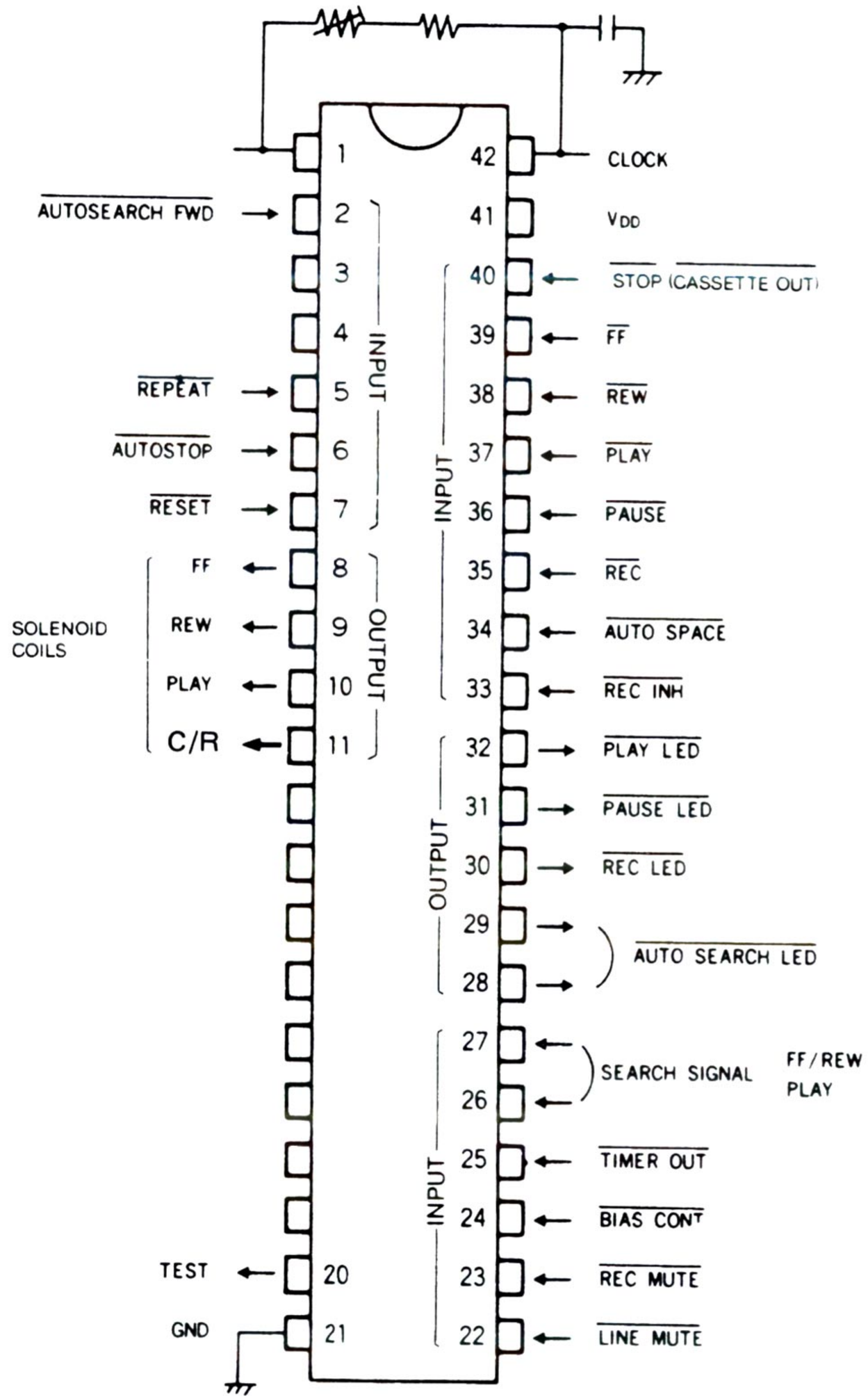

HA-12058 NT (DOLBY B & C TYPE NOISE REDUCTION SYSTEM)

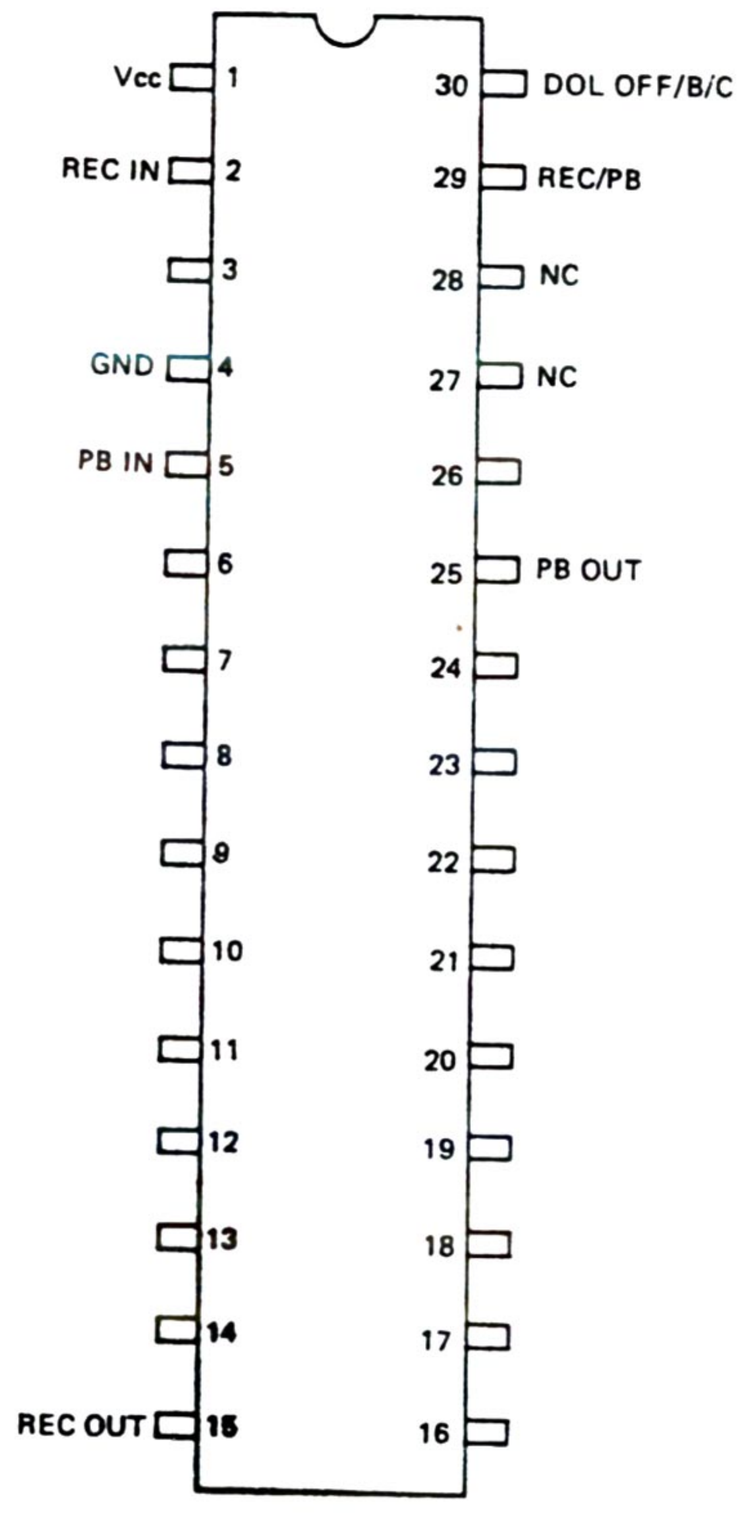

LB-1287 (SOLENOID DRIVER)

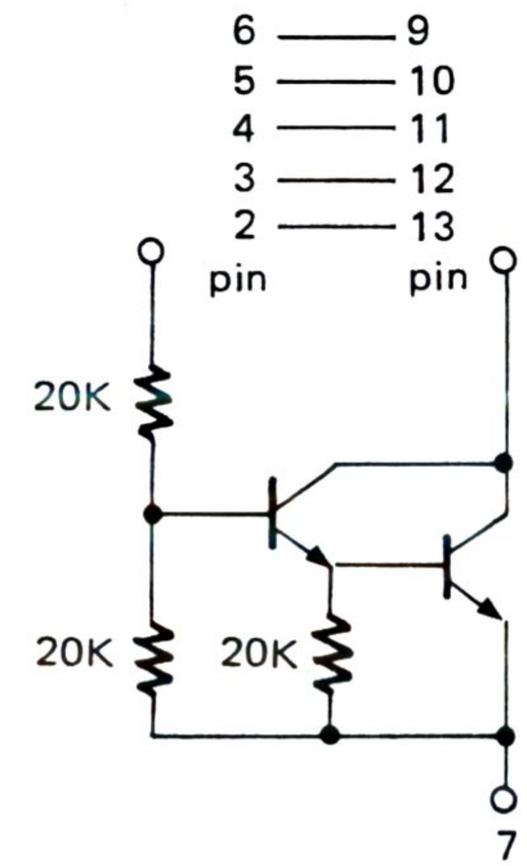

www.hifiengine.com

PC BOARD VIEW FROM BOTTOM SIDE

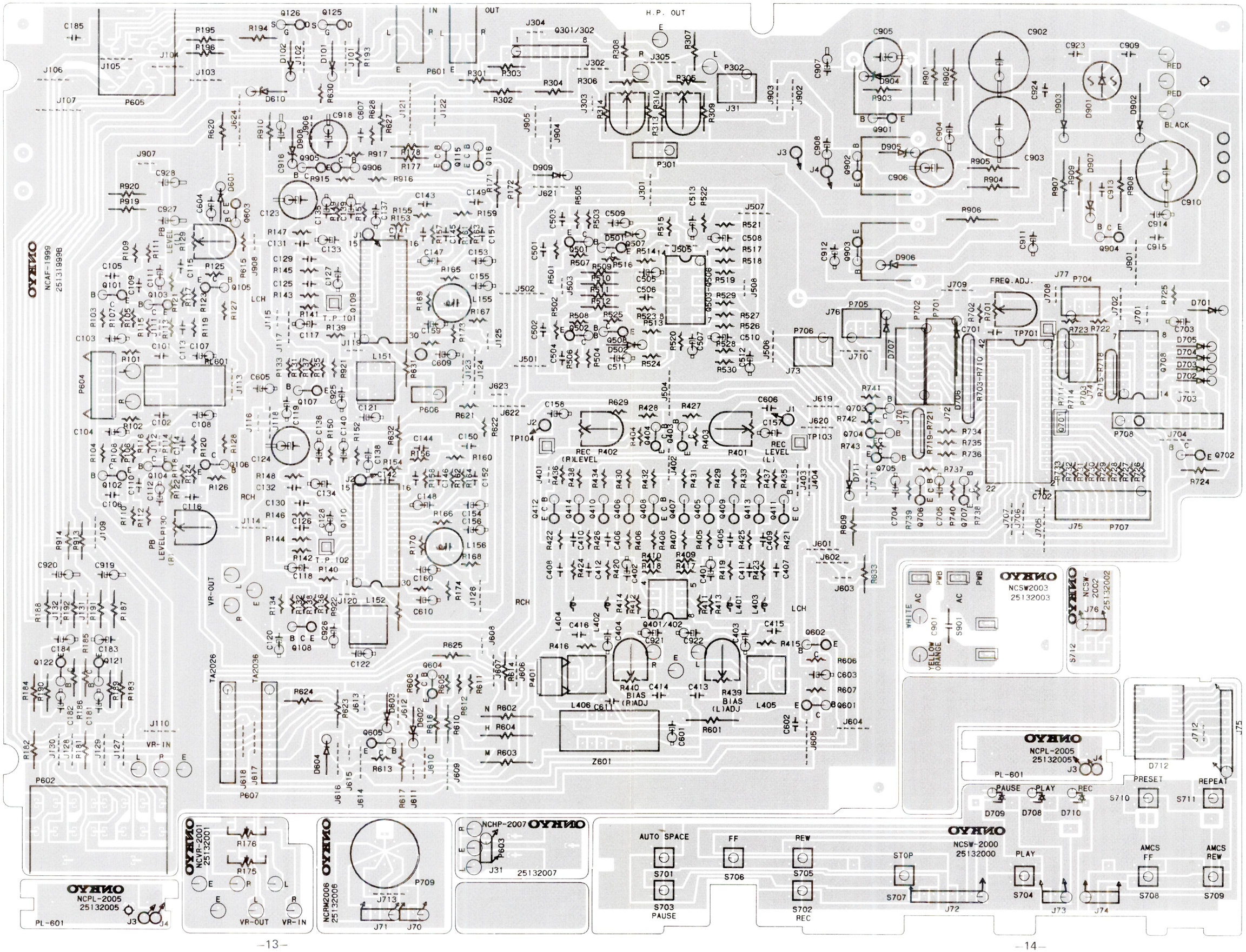

SCHEMATIC DIAGRAM

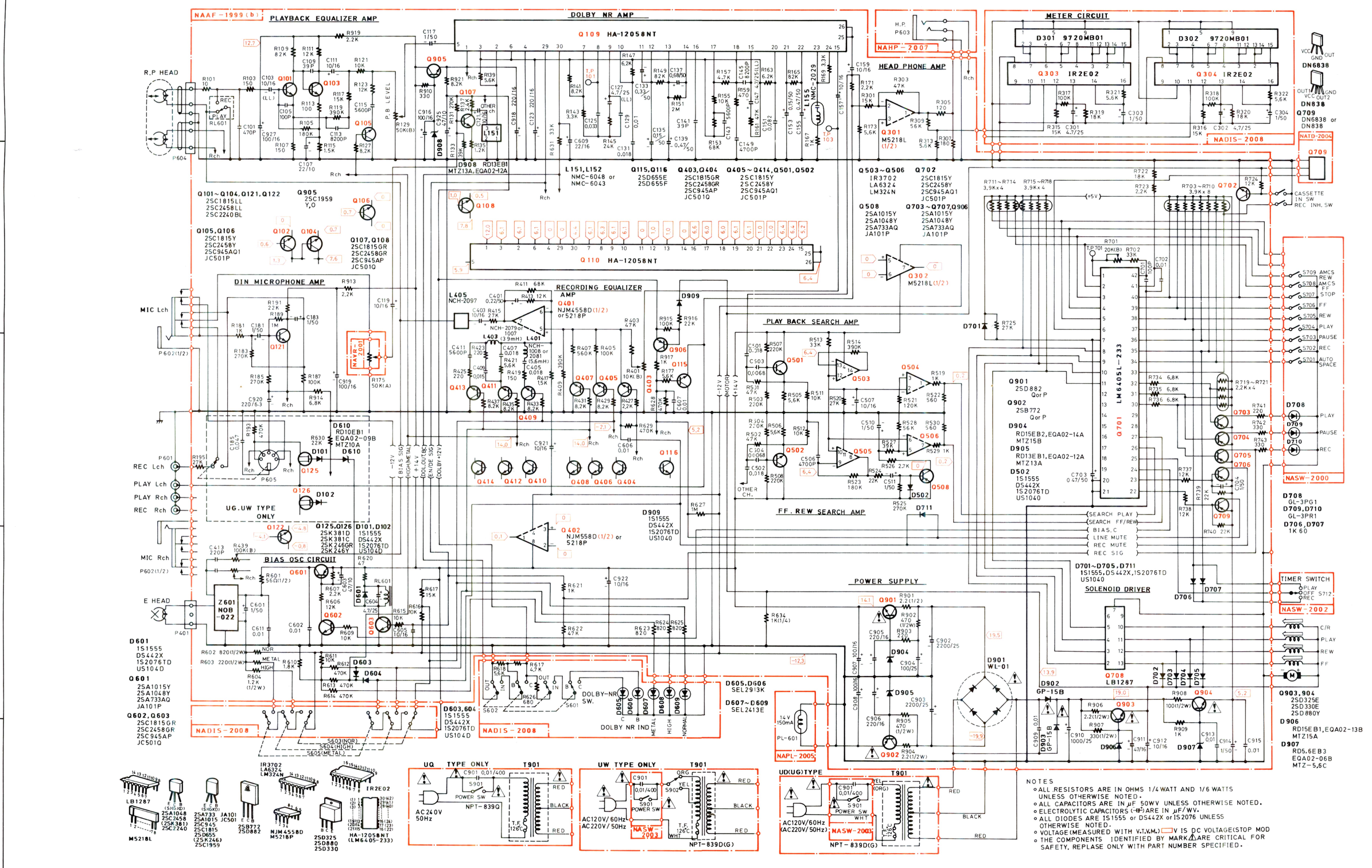

ONKYO CORPORATION

PRINTED CIRCUIT BOARD-PARTS LIST

REC./PB AMPLIFIER PC BOARD (NAAF-1999/d)

CIRCUIT. NO.	PART NO.	DESCRIPTION
	ICs	
Q109, Q110	222729	HA-12058NT
Q301, Q302	222652	M5218L
Q401, Q402	222465 or 222808	NJM4558D or M5218P
Q503-Q506	222681, 222695 or 222604	IR3701, LA6324 or LM324N
Q701	222728	LM6405L-233
Q708	222698	LB-1287
	Transistors	
Q101-Q104	2211896,	2SC1815L (L),
Q121, Q122	2212256 or 2211406	2SC2458L (L) or 2SC2240 (BL)
Q105, Q106	2211254,	2SC1815 (Y),
Q405-Q414	2212114,	2SC2458 (Y),
Q501, Q502	2210747 or	2SC945A (Q1) or
Q702	2212484	JC501P
Q107, Q108	2211255,	2SC1815 (GR),
Q403, Q404	2212115,	2SC2458 (GR),
Q602-Q603	2210746 or 2212485	2SC945A (P) or JC501 (Q)
Q115, Q116	2211706 or 2211705	2SD655 (F) or 2SD655 (E)
Q125, Q126	2212304, 2212303, 2211945 or 2211944	2SK381 (D), 2SK381 (C), 2SK246 (GR) or 2SK246 (Y), (G/W)
Q507, Q508	2211454,	2SA1015 (Y),
Q601, Q603	2212124,	2SA1048 (Y),
Q703-Q707	2210804 or	2SA733A (Q) or
Q906	2212494	JA101P
Q901	2201285 or 2201286	2SD882 (Q) or 2SD882 (P)
Q902	2201275 or 2201276	2SB772 (Q) or 2SB772 (P)
Q903, Q904	2201074, 2201035 or 2201385	2SD880 (Y), 2SD325 (E) or 2SD330 (E)
Q905	2211544 or 2211543	2SC1959 (Y) or 2SC1959 (O)
	Diodes	
D101, D102	223105, 223133, 223145 or 223150	1S1555, DS442X, 1S2076TD or US1040, (G/W)
D501, D502 D601, D711 D701-D705 D901	223105, 223133, 223145 or 223150	1S1555, DS442X, 1S2076TD or US1040
D602	2239671, 2242912 or 2243251	RD15EB1, EQA02-13B or MTZ15A
D610	2239591, 2242877 or 2243211	RD10EB1, EQA-02-09D or MTZ-10A, (G/W)
D706, D707	223132	1K60
D901	223862	WL-01
D902, D903	223842	GP-15B
D904	2239672, 2242921 or 2243252	RD15EB2, EQA02-14A or MTZ15B
D905, D908	2239651, 2242901 or 2243241	RD13EB1, EQA-02-12A or MTZ13A

CIRCUIT NO.	PARTS NO.	DESCRIPTION
D906	2239671, 2242912 or 2243251	RD15EB1, EQA-02-13B or MTZ15A
D907	2239473, 2242845 or 2243153	RD5.6EB3, EQA02-06B or MTZ5.6C
	Coils	
L151, L152	233313 or 233306	NMC-6048 or NMC-6043
L155, L156	233245 or	NMC-2029
L401, L402	24606070 or 231041	NCH-1008 or NCH-2081
L403, L404	231039 or 24606069	NCH-2079 or NCH-1007
L405, L406	233314	NCH-2097
	Osc. Block	
Z601	24606141	NOB-022
	Capacitors	
C103, C104	392841007	10μF, 16V, LL
C107, C108	352732209	22μF, 10V, Elect.
C111, C112	352741009	10μF, 16V, Elect.
C117, C118	352780109	1μF, 50V, Elect.
C119-C122	352741009	10μF, 16V, Elect.
C123, C124	352742219	220μF, 16V, Elect.
C127, C128	392850477	4.7μF, 25V, LL
C133, C134	352783399	0.33μF, 50V, Elect.
C135, C136	352781599	0.15μF, 50V, Elect.
C137, C138	352786899	0.68μF, 50V, Elect.
C139, C140	352784799	0.47μF, 50V, Elect.
C147, C148	392850477	4.7μF, 25V, LL
C153, C154	352781599	0.15μF, 50V, Elect.
C155, C156	352784799	0.47μF, 50V, Elect.
C157-C160	352741009	10μF, 16V, Elect.
C181-C184	352780109	1μF, 50V, Elect.
C507	352741009	10μF, 16V, Elect.
C510-C511	352780109	1μF, 50V, Elect.
C401, C402	352782299	0.22μF, 50V, Elect.
C403, C404	352741009	10μF, 16V, Elect.
C601	352780109	1μF, 50V, Elect.
C603	352734709	47μF, 10V, Elect.
C604	352750479	4.7μF, 25V, Elect.
C605	352741009	10μF, 16V, Elect.
C609, C610	352742209	22μF, 16V, Elect.
C703	352784799	0.47μF, 50V, Elect.
C704	352780109	1μF, 50V, Elect.
C902, C903	352752229	2,200μF, 25V, Elect.
C904	352751019	100μF, 25V, Elect.
C905, C906	352742219	220μF, 16V, Elect.
C907, C908	352741019	100μF, 16V, Elect.
C910	352751029	1,000μF, 25V, Elect.
C911	352744709	47μF, 16V, Elect.
C912	352741009	10μF, 16V, Elect.
C914	352780109	1μF, 50V, Elect.
C916	352741019	100μF, 16V, Elect.
C918	352742219	220μF, 16V, Elect.
C919	352741019	100μF, 16V, Elect.
C920	352722219	220μF, 6.3V. Elect.
C921, C922	352741009	10μF, 16V, Elect.
C925, C926	352734709	47μF, 10V, Elect.
C927, C928	352741019	100μF, 16V, Elect.

CIRCUIT NO.	PARTS NO.
	Resistors
R129, R130	5215023 or 5215046
R401, R402	5215021 or 5215045
R439, R440	5215024 or 5215047
R601	441525604
R602	441528214
R603	441522214
R604	441521224
R701	5215003 or 5215022
R703-R710	49121392408
R711-R714 R715-R718	49121392404
R719-R721	49121222404
R901, R904 R906	441520224
R902, R905	431524715
R907	431523315
R908	441521014
	Relay
RL601	25065174
	Sockets
P301	2000307A
P606	2000306A
P607	2000226
P701	25050145
P702	25050144
P703	25050141
P704-P706	25050140
P707	25050146
P708	2000251
	Plugs
P401	25055042
P604	25055037
	Terminals
P601	25045120
P602	25045134

www.hifiengine.com

DESCRIPTION
N08HR50KBC, Semi-fixed
N08HR10KBC, Semi-fixed
N08HR100KBC, Semi-fixed
56Ω, 1/2W, Metal oxide film
820Ω, 1/2W, Metal oxide film
220Ω, 1/2W, Metal oxide film
1.2kΩ, 1/2W, Metal oxide film
N08HR20KBC, Semi-fixed
3.9kΩx8, 1/8W, Network
3.8kΩx4, 18W, Network
2.2kΩx4, 1/8W, Network
2.2Ω, 1/2W, Metal oxide film
470Ω, 1/2W, Solid
330Ω, 1/2W, Solid
100Ω, 1/2W, Metal oxide film
NRL-2P1A-DC12-09
NSAS-8P-266
NSAS-6P-265
NSAS-20P-130
NJPS-8P-S
NJPS-7P-S
NJPS-4P-S
NJPS-3P-S
NJPS-9P-S
NSAS-11P-189
NPLG-3P32
NPLG-6P28
NPJ-4PDBL49, Input/output
HLJ-4337-01-010, Microphone

CIRCUIT NO.	PARTS NO.	DESCRIPTION
P605	25050064	NSCT-5P1, DIN input/output (G/W)
	Radiator	
	27160029	RAD-07, Power supply
	27160029-1	RAD-07B, Power suuply for micro computer

CONTROL SWITCH PC BOARD (NASW-2000/a)

CIRCUIT NO.	PART NO.	DESCRIPTION
	LEDs	
D708-D710	225127	GL-3PG1
	Switches	
S701-S711	25035389	NPS-111-L353
	Holder	
	27190278	LED

INPUT VOLUME PC BOARD (NAVR-2001)

CIRCUIT NO.	PART NO.	DESCRIPTION
R175, R176	5104132	N16GKF50KA45F, Variable resistor

TIMER SWITCH PC BOARD (NASW-2002)

CIRCUIT NO.	PART NO.	DESCRIPTION
S712	25030227	NRS-123-25U, Rotary switch

POWER SWITCH PC BOARD (NASW-2003)

CIRCUIT NO.	PART NO.	DESCRIPTION
C901	3500065A	0.01μF, AC125V/400V, Capacitor IS
C901a	27300601	SB-1925, Cover for C901
S901	25035375	NPS-111-L339P, Power switch
A7	27140878	Bracket, power

HALL IC PC BOARD (NATD-2004)

CIRCUIT NO.	PART NO.	DESCRIPTION
Q709	222558 or 222470	DN6838 or DN838K, Hall IC
	27190173	Holder for DN6838
	27190251	Spacer for DN838K

EDGE LOGHT PC BOARD (NAPL-2005)

CIRCUIT NO.	PART NO.	DESCRIPTION
PL601	210090	150mA, 14V, Lamp

HEADPHONE TERMINAL PC BOARD (NAHP-2007)

CIRCUIT NO.	PART NO.	DESCRIPTION
P603	25045139	HLJ0540-01-010, Stereo hedaphone terminal

DISPLAY TERMINAL PC BOARD (NADIS-2008)

CIRCUIT NO.	PART NO.	DESCRIPTION
	ICs	
Q303, Q304	222623	IR2E02
	LEDs	
D301, D302	225159	SEL9720MB01, Array
D605, D606	225142	SEL2913K
D607-D609	225137	SEL2413E
	Capacitors	
C301, C302	352750479	4.7μF, 25V, Elect.
C303, C304	352780109	1μF, 50V, Elect.
	Switches	
S601-S603	25035399	NPS-122-L364
	Plugs	
P302	25055101	NPLG-4P85
P609	25055107	NPLG-10P91
P610	25055100	NPLG-3P84
	Holder	
	27190277	LED

ONKYO CORPORATION
International Division: No. 24 Mori Bldg., 23-5, 3-chome, Nishi-Shinbashi, Minato-ku, Tokyo, Japan
Telex: 2423551 ONKYO J. Phone: 03-432-6981
ONKYO U.S.A. CORPORATION
200 Williams Drive. Ramsey. N.J. 07446 Tel. 201-825-7950
ONKYO DEUTSCHLAND GMBH, ELECTRONICS
8034 München-Germering, Industriestrasse 18, West Germany. Telex: 521726 Telefon: (089)-84-3071

A407 Printed in Japan

www.hifiengine.com