SERVICE MANUAL 4000

marantz

model 4000

adaptor *Quadradial 4* amplifier

TABLE OF CONTENTS

SECTION	PAGE
Introduction	1
Service Notes	1
Mode Switch	1
Tape Monitor Switch	2
CD-4/AUX Switch	2
Pre-Amplifiers	2
Balance Control	2
Meter Amplifier	2
Power Supply	2
Trouble Analysis	2
Automatic Voltage Regulator Adjustment	2
Level Meter Adjustment	2
Performance Verification	3
Test Equipment Required for Servicing	5
Parts List	17
Technical Specifications	24

LIST OF ILLUSTRATIONS

FIGURE	PAGE
1. AC Power Control Box Simplified Schematic	6
2. Amplifier Output Load Box Simplified Schematic	6
3. Front Panel Adjustment and Component Locations	7
4. Main Chassis Component Locations (Top View)	7
5. Rear Panel Component Locations	8
6. Main Chassis Component Locations (Bottom View)	8
7. Input Output Terminal Unit Assembly P100 Component Locations	9
8. Buffer Amplifier, Vari-Matrix and Switches Unit Assembly P200 Component Locations	9
9. Balance Control Unit Assembly P300 Component Locations	10
10. Master Volume and Loudness Switch Unit Assembly P400 Component Locations	10
11. Tone Amplifier Unit Assembly P500 Component Locations	10
12. Front Channel Amplifier Assembly P600 Component Locations	11
13. Rear Filter Switches and Buffer Amplifier Assembly P700 Component Locations	11
14. Speaker Terminals Unit Assembly P800 Component Locations	11
15. Meter Amplifier Assembly P900 Component Locations	12
16. Power Supply Assembly PP01 Component Locations	12
17. Rear Channel Amplifier Assembly PD01 Component Locations	12
18. Relay Circuit Assembly PT01 Component Locations	12
19. Exploded Mechanical Diagram	13
20. Schematic Diagram	15

TABLE	PAGE
1. Test Equipment Required for Servicing	5

www.hifiengine.com

INTRODUCTION

This service manual was prepared for use by Authorized Warranty Stations and contains service information for Marantz Model 4000 Solid-State Quadradial Adaptor-Amplifier.

Servicing information and voltage data included in this manual are intended for use by the knowledgeable and experienced technician only. All instruction should be read carefully. No atempt should be made to proceed without a good understanding of the operation in the circuits.

The parts lists furnish information by which replacement part may be ordered from the Marantz Company. A simple description is included for parts which can usually be obtained through local suppliers.

1. SERVICE NOTES

As can be seen from the circuit diagram the chassis of Model 4000 consists of the following units. Each unit mounted on a printed circuit board is described within the square enclosed by a bold dotted line on the circuit diagram.

1. Input Output Terminal Unit ..... mounted on P.W. Board, P100
2. Buffer Amplifier, Vari-Matrix and Switches Unit ..... mounted on P.W. Board, P200
3. Balance Control Unit ..... mounted on P.W. Board, P300
4. Master Volume and Loudness Switch Unit ..... mounted on P.W. Board, P400
5. Tone Amplifier Unit ..... mounted on P.W. Board, P500
6. Front Channel Amplifier ..... mounted on P.W. Board, P600
7. Rear Filter Switches and Buffer Amplifier ..... mounted on P.W. Board, P700
8. Speaker Terminals Unit ..... mounted on P.W. Board, P800
9. Meter Amplifier ..... mounted on P.W. Board, P900
10. Power Supply ..... mounted on P.W. Board, PP01
11. Rear Channel Amplifier ..... mounted on P.W. Board, PD01
12 Relay Circuit ..... mounted on P.W. Board, PT01

2. MODE SWITCH

MODE switch S202 has positions of, MONO, 2 CH, DISCRETE, VARI-MATRIX, and SQ DECORDER.

In the MONO position, all input signals are mixed together and delivered to all four channels.

In the 2 CH position, each pair of input signals right-front (RF) and right-rear (RR) and left-front (LF) and left-rear (LR) are mixed together. The resultant signals (RF + RR) and (LF + LR) are delivered to the pairs of RF and RR and LF and LR channels, respectively.

In the DISCRETE position, each channel signal is separately routed to the corresponding channel.

In the VARI-MATRIX position, 2-channel stereo input signals are converted into quadraphonic signals through the vari-matrix circuit; the input right and left channel signals are fed directly to the LF and RF channels, while the signals to the LR and RR channels are synthesized from the 2-channel input signals under the control of the DIMENSION control. The LR and RR channel signal components are controlled by the DIMENSION control as shown below.

Dimension Control Setting	LR Output	RR Output
Minimum (FCCW)	LF + RF	RF + LF
Center	LF	RF
Maximum (FCW)	LF – RF	RF – LF

When the DIMENSION control is set to the minimum position the LR and RR channel signals become monophonic, to the center are stereophonic, and to the maximum are out of phase.

In the SQ DECODER position, signal sources encoded by the CBS SQ system are decoded into 4-channel signals. Required for this operation is incorporation of the SQ Adaptor, Model

www.hifiengine.com

SQA-1, into the Model 4000.

3. TAPE MONITOR SWITCH

If this switch is set to the 2 CH position, it is connected to the 2 CH INPUT terminal, at the SOURCE position, to the MAIN INPUT terminal, and at the 4 CH position, to the 4 CH INPUT terminal.

4. CD-4/AUX SWITCH

If this switch is depressed, it is connected to the CD-4/AUX inputs irrespective of the position of the MONITOR switch.

5. PRE-AMPLIFIERS

In the front channels, mode processed signals from the VOLUME control are applied to the front pre-amplifiers where the signals are amplified and fed to the FRONT OUTPUT jacks.

The rear-channel signals are fed to the tone control circuit for high and low frequency response adjustment and are then passed to the REAR OUTPUT jacks.

6. BALANCE CONTROL

Front and rear channel signals from the buffer amplifiers are fed into the balance control circuit, in which the signals are controlled by three balancers: FRONT L-R, REAR L-R, and FRONT-REAR. By setting the front-rear balancer to the "front" side and the front left-right balancer to the "left" side, for example, only the front left channel is driven.

The balance control circuit is provided with the REMOTE CONTROL switch which makes the Model RC-4 Remote Control Box operative when set to the "REMOTE" position. In the "REMOTE" position the balancers on the Model 4000 become ineffective since signals are fed to the Model RC-4.

7. METER AMPLIFIER

The meter is driven by the signal connected to the SPEAKER SWITCHING INPUTS terminal.

8. POWER SUPPLY

The power supply unit consisting of transistors HP05 and HP06, which operates as an automatic voltage regulator, provides+35V DC to all of the amplifiers except main amplifiers.

9. TROUBLE ANALYSIS

1. No line consumption or zero bias	a. Check line cord, fuse, shorted HP05, HP06 and HP07. b. Check for open rectifiers HP01, HP02, HP03 and HP04.
2. Excessive hum and noise level	a. Check filter capacitors CP03, CP04, CP05 and CP06. b. Check for shorted transistor HP05.

10. AUTOMATIC VOLTAGE REGULATOR ADJUSTMENT

Connect a VTVM to JP05(+) and JP04(−) and adjust RP07 until the VTVM reads 35.0V under no signal condition.

11. LEVEL METER ADJUSTMENT

Set the METER RANGE switch to the 0dB position, and connect a 1KHz, 22V signal to each SPEAKER SWITCHING INPUTS terminal.

Adjust R901, R902, R903 and R904 until each meter reads the reference level of 0dB (marked red). Each meter will then indicate a 60watt level at 0VU when 8ohm speakers are connected. (NOTE: It is not necessary that 8ohm loads be connected for this adjustment.)

www.hifiengine.com

R901 corresponds to the left-front meter
R903 corresponds to the right-front meter
R902 corresponds to the lefr-rear meter
R904 corresponds to the right-rear meter

12. PERFORMANCE VERIFICATION

Test Procedure

A. Test Equipment

Refer to Table 1 for required test equipment.

B. Preliminary Procedures

1. Make the test setup shown in Figure 1 with the instrument controls set in the following positions:

Line Switch	off
Variable-line switch	variable
Watt Meter Switch	on
Variac	0 (fully CCW)
Load	47 Kohms
Audio Generator	Frequency 1 KHz
Output	5V range
Gain	Minimum
AC Volt Meter	3V range

2. Make sure that connections between the resistive load and the system terminals of the Model 4000 have negligible resistance compared with the resistance of the load itself. Appreciable resistance in wiring adds to the total load, resulting in inaccurate measurements of output power.
3. Connect pre-amplifier FRONT and REAR OUTPUTS to load and connect AC cord to line power.
4. Remove the top cover.

C. Total Hum and Noise Test

1. With shorting plugs connected to the CD-4/AUX IN jacks and an 47Kohms resistive load connected across the output terminals, connect a distortion analyzer across the load.
   NOTE: In this test and tests that follow, if the distortion analyzer used does not contain a built-in voltmeter, a VTVM may be substituted.
2. Set the distortion analyzer controls for voltage measurements and apply power to the amplifier. Set the volume control fully CCW. Set the CD-4/AUX switch on (in).
3. If the distortion analyzer indicates more than 0.3mV, refer to the trouble analysis section of this manual.
4. Set the VOLUME control fully CW. If the distortion analyzer indicates more than 0.3mV refer to the trouble analysis section of this manual.

D. Maximum Output Voltage

1. Connect the audio oscillator to the CD-4/AUX input. Set audio oscillator frequency to 1KHz. Set CD-4/AUX switch on (in).
2. With the distortion analyzer connected across the output load (47Kohms), set the analyzer on the 3V AC scale.
3. Turn the analyzer on and increase the audio oscillator output to 180mV, and verify the analyzer indicates more than Front channel 1V, Rear channel 2V.

E. Harmonic Distortion Test

1. Set the frequency of the audio oscillator and the distortion analyzer to 20KHz.
2. Set the controls of the analyzer for voltage measurement on the 3-volt scale.
3. Adjust the audio oscillator output level until the analyzer meter indicates Front channel 1V, Rear channel 2V.

www.hifiengine.com

4. Switch the distortion analyzer to Set Level – Manual mode, and adjust SENSITIVITY for full scale reading on 0-1 scale.
5. Measure the total harmonic distortion with the analyzer and verify it is less than 0.1%.
   NOTE: Use the SYSTEM CONNECT OUT terminals for the output signals of the Model 4000. Set the REAR CHANNEL OUTPUT LEVEL control to the extreme right position (maximum).
6. Switch the distortion analyzer back to SET LEVEL MANUAL.
   (Do not adjust sensitivity of analyzer.)
7. Change the frequency of the audio oscillator and distortion analyzer to 1KHz. Adjust audio oscillator output as necessary to have a full scale reading on the 0-1 scale on the analyzer.
8. Measure the distortion, verifying it is no greater than 0.1%.
9. Repeat steps 7 and 8, changing frequency to 20Hz.
   Distortion should be no more than 0.1%.
10. Check for parastic oscillations; there should be none.

F. Channel Separation

1. Set audio oscillator to 20KHz. Connect oscillator to channel LR CD-4/AUX input only, with shorting plug (10Kohm) in all the other channels CD-4/AUX input. Connect distortion analyzer to speaker output terminals channel LR.
2. Adjust oscillator output until distortion analyzer indicates 0dB.
3. Measure channel RR output. Distortion analyzer should indicate –30dB or greater.
4. If indication is less than –30dB, adjust input wires to preamp board until reading is –30dB or greater.

www.hifiengine.com

13. TEST EQUIPMENT REQUIRED FOR SERVICING

Table 1 lists the test equipment required for servicing the Model 4000 Quadradial 4 Adaptor. The wattmeter, ac voltmeter, and variac may be assembled as a test fixture as shown schematically in Figure 1, and the load resistors and ac ammeter may be assembled into a second test fixture as shown in Figure 2.

Item	Manufacturer and Model No. (or equivalent)	Use
Distortion Analyzer	Hewlett Packard, Model 331A or 333A	Measures distortion and voltage of amplifier output.
Audio Oscillator	Weston Model CVO-100P (NOTE: Less than 0.02 percent residual distortion is required.)	Sinewave and squarewave signal source.
Oscilloscope	Tektronic, Model 503; Data, Model 555	Waveform analysis and troubleshooting.
VTVM	RCA Senior Volt-Ohmyst, Model WV-98C	Voltage and resistance measurements.
AC Wattmeter	Simpson, Model 390	Monitors primary power consumption of amplifier.
Line Voltmeter (0 to 150 vac)	Commercial Grade	Monitors potential of primary power to amplifier.
Variable Autotransformer (0 to 140 vac, 10 amps)	Powerstat, Model 116B	Adjusts level of primary power to amplifier.
Shorting Plug	Use phono plug with 600 ohms across center pin and shell.	Shorts amplifier input to eliminate noise pickup.
Power Supply Bleeder Resistor (10 ohms at 1W)	Commercial Grade	Discharges power supply filter capacitors prior to disassembly or resistance measurements.
Output Load Resistor (47KΩ ± 0.5%, ¼W)	Commercial Grade	Provides 47Kohm load for pre-amplifier output termination.
AC Power Control Box	Optional Item. Fabricate in accordance with Figure 1.	Monitors and controls primary power for amplifier.
Amplifier Output Load Box	Optional Item. Fabricate in accordance with Figure 2.	Provides pre-amplifier loads.

Table 1. Test Equipment Required for Servicing

www.hifiengine.com

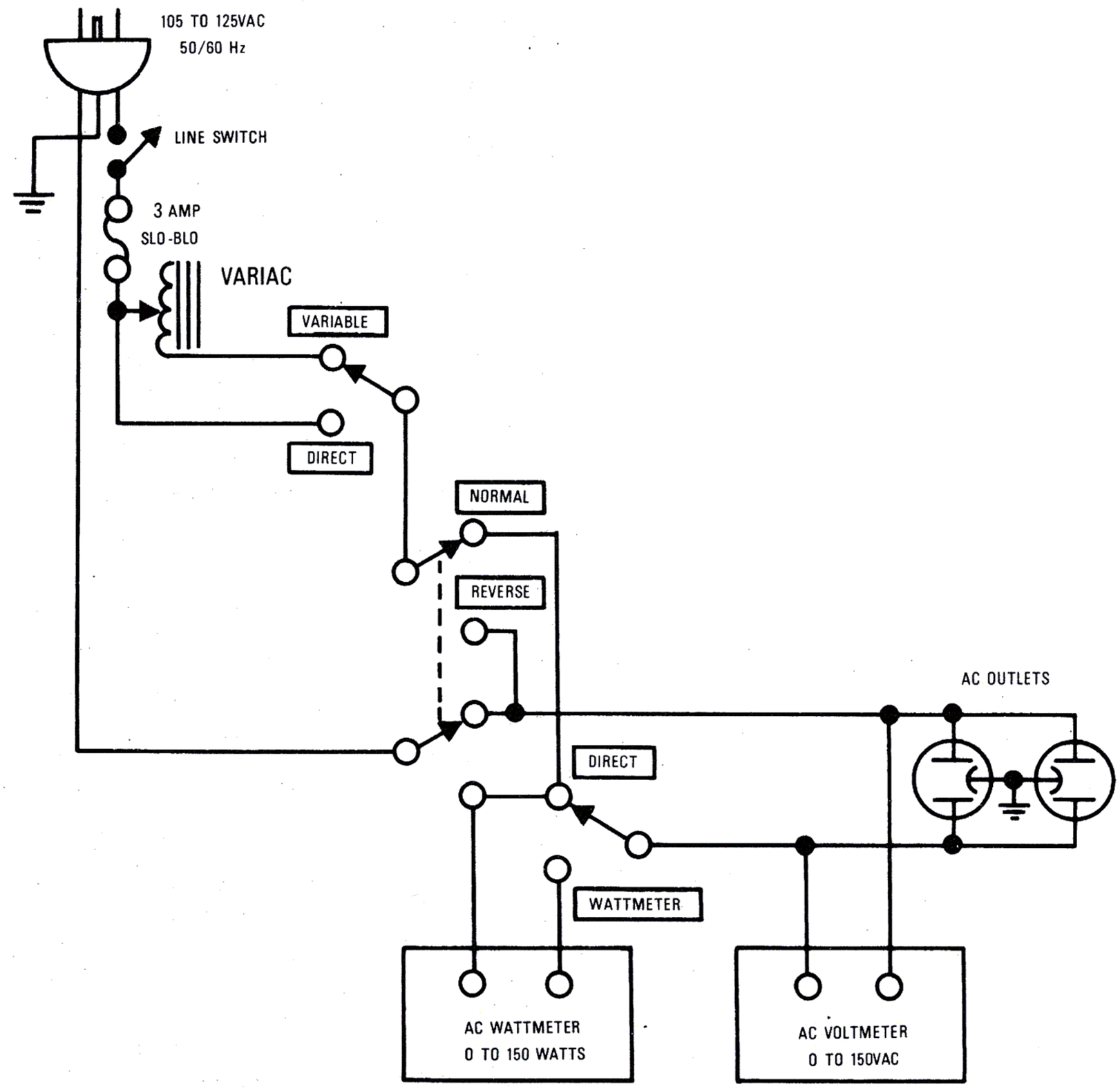

Figure 1. AC Power Control Box Simplified Schematic

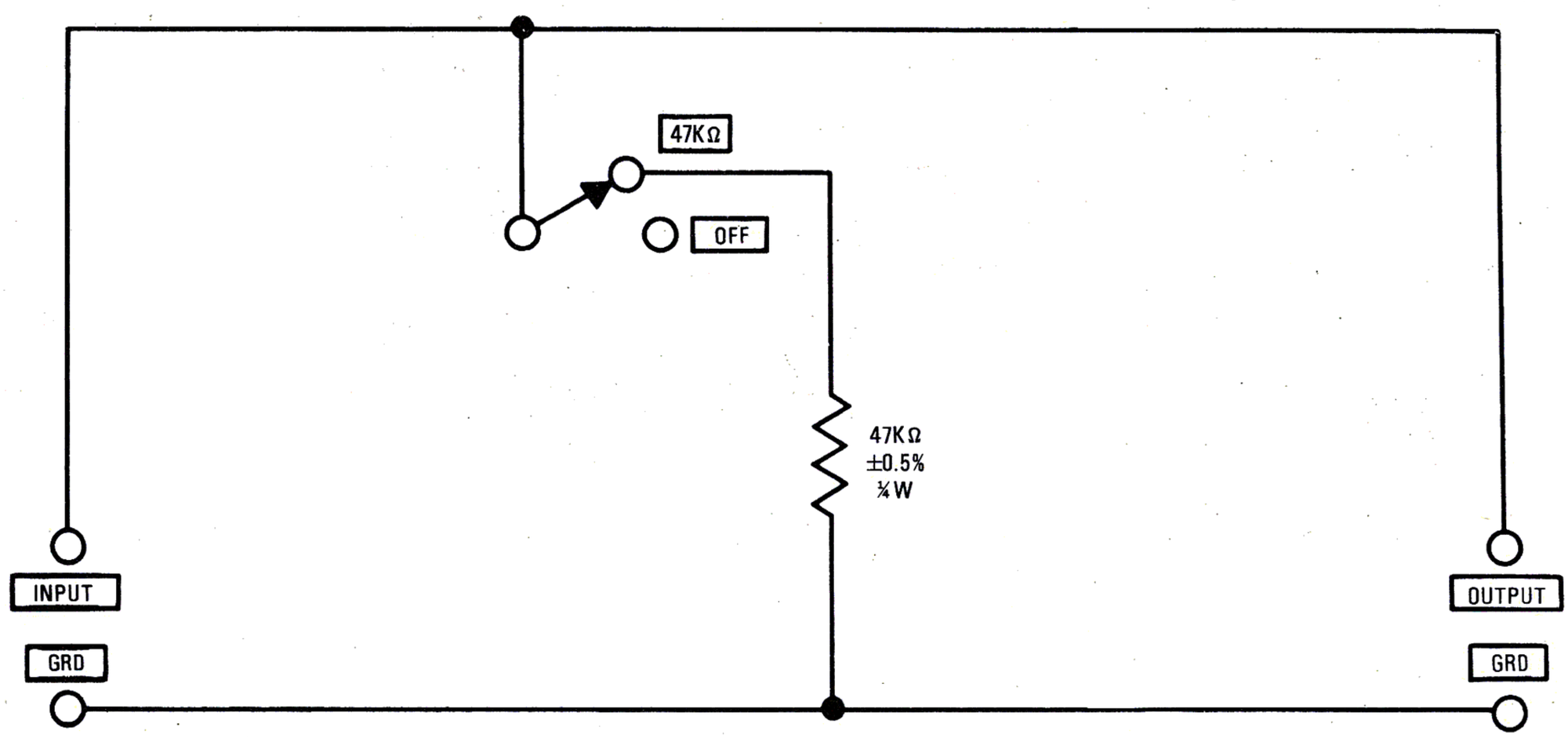

Figure 2. Amplifier Output Load Box Simplified Schematic

www.hifiengine.com

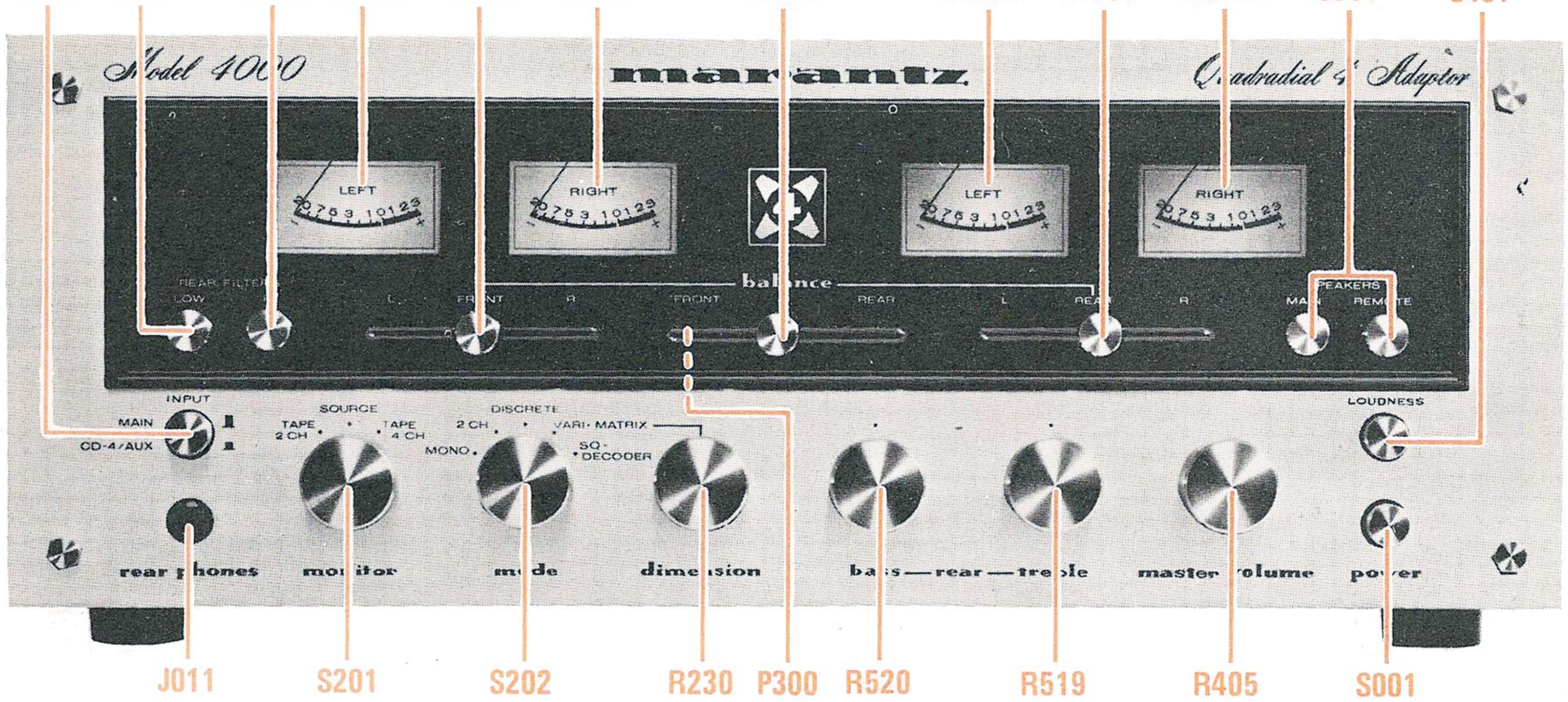

Figure 3. Front Panel Adjustment and Component Locations

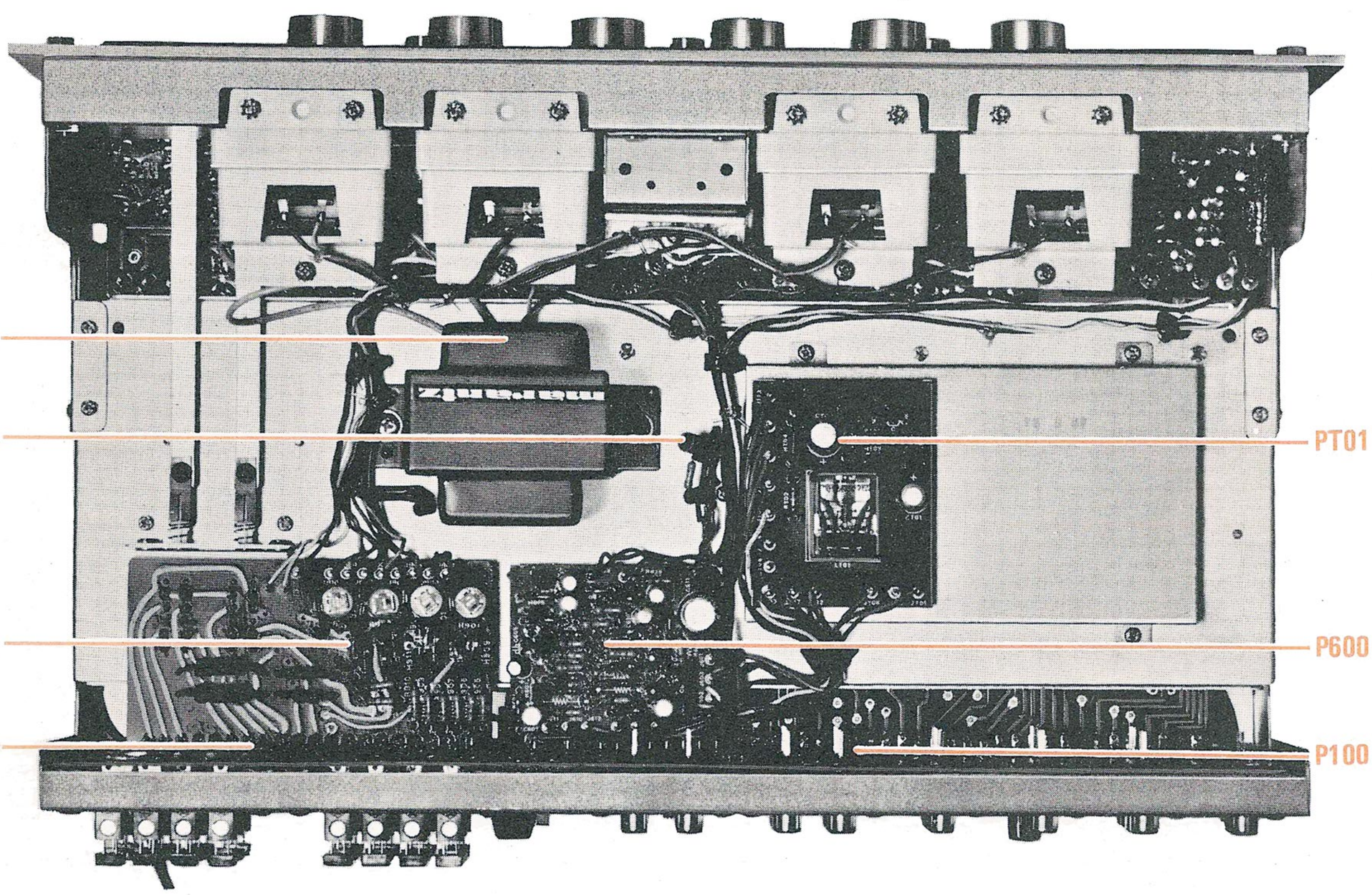

Figure 4. Main Chassis Component Locations (Top View)

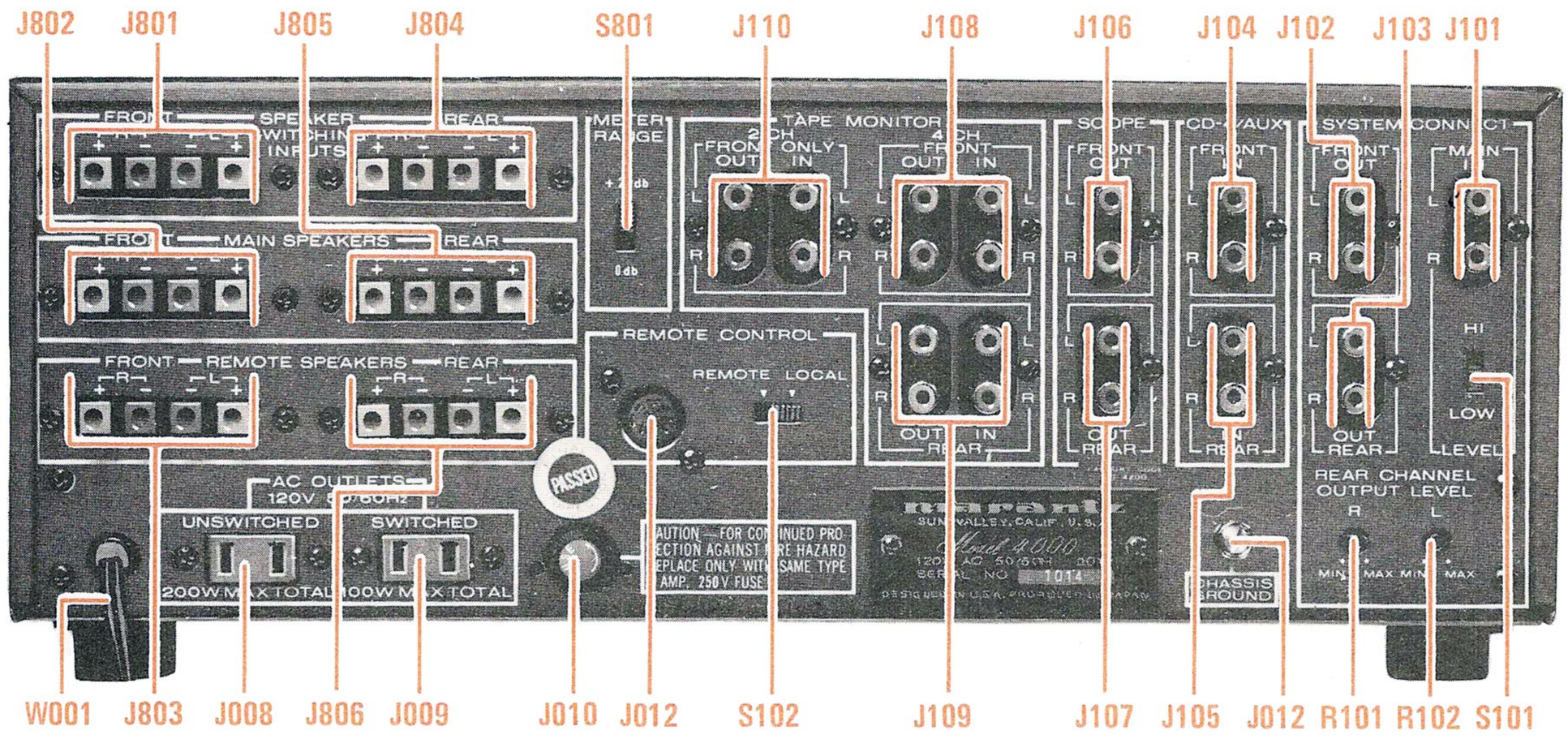

Figure 5. Rear Panel Component Locations

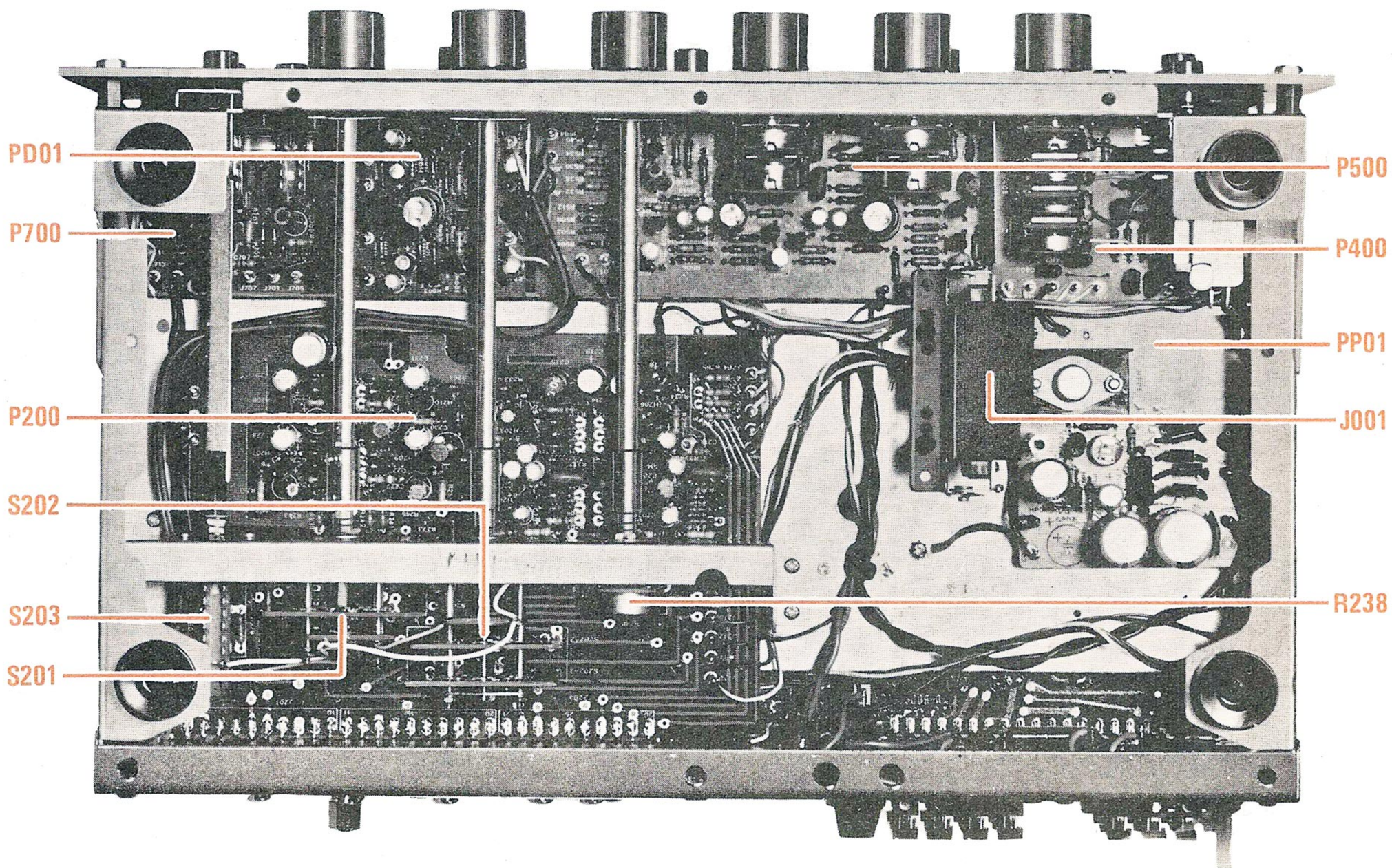

Figure 6. Main Chassis Component Locations (Bottom View)

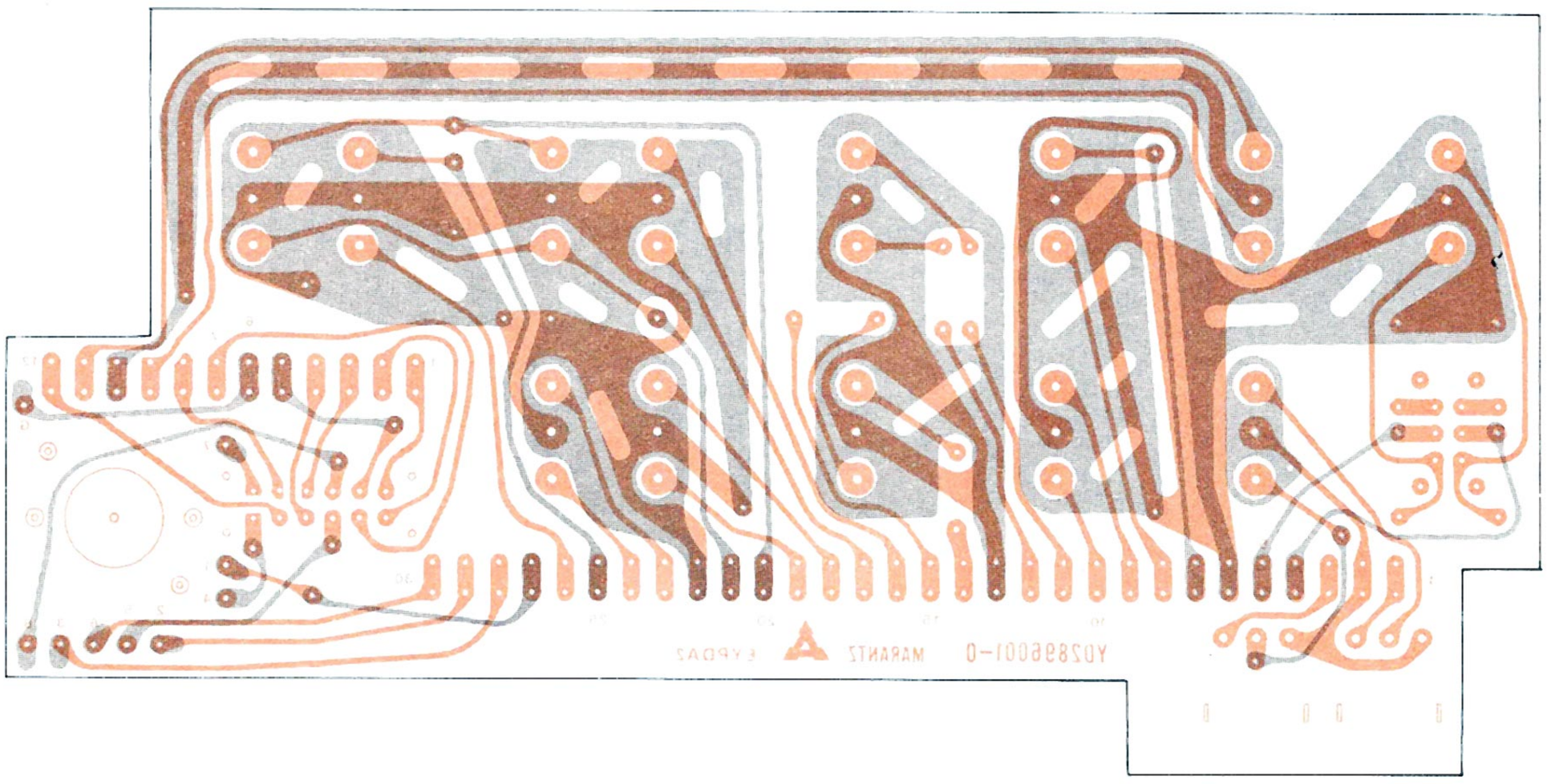

Figure 7. Input Output Terminal Unit Assembly P100 Component Locations

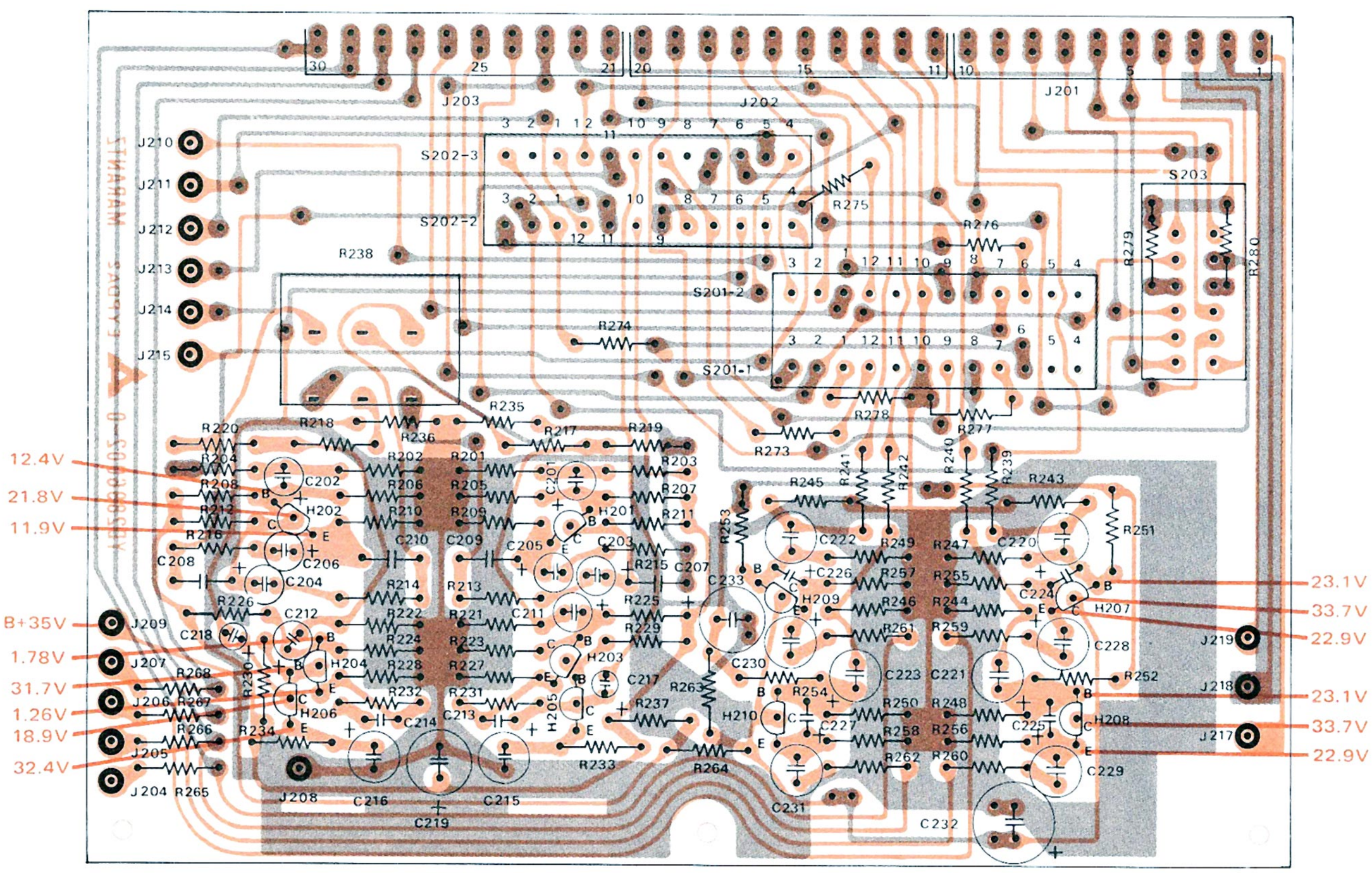

Figure 8. Buffer Amplifier, Vari-Matrix and Switches Unit Assembly P200 Component Locations

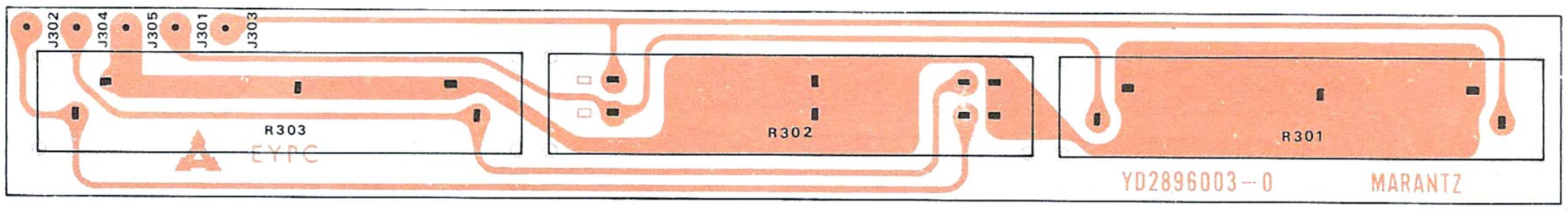

Figure 9. Balance Control Unit Assembly P300 Component Locations

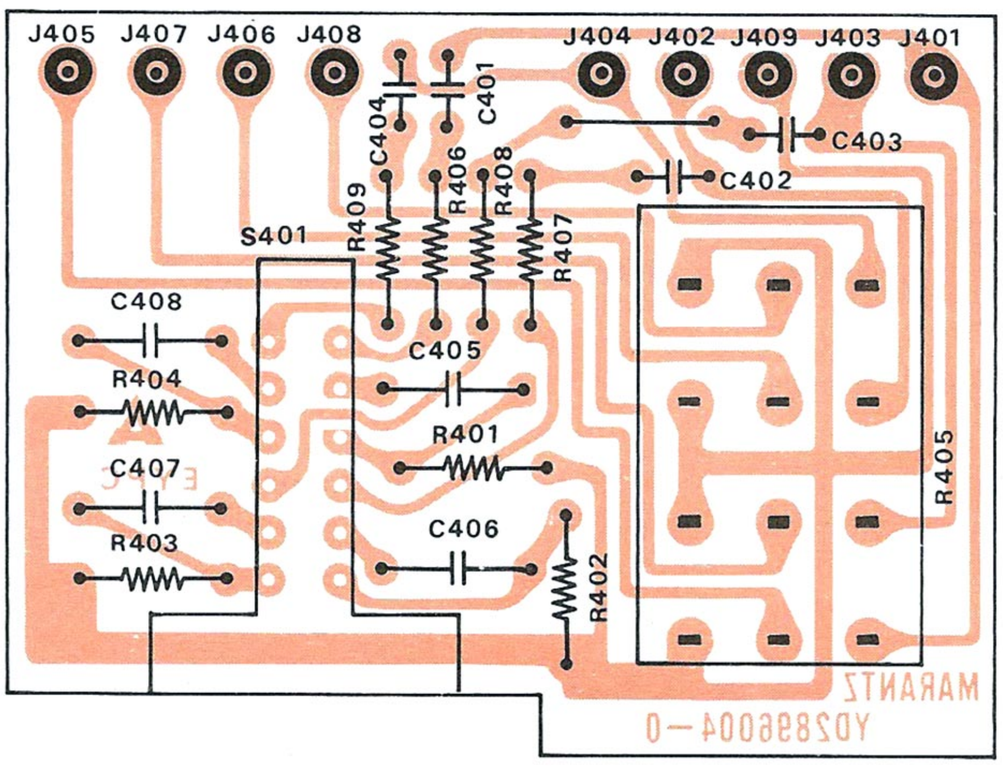

Figure 10. Master Volume and Loudness Switch Unit Assembly P400 Component Locations

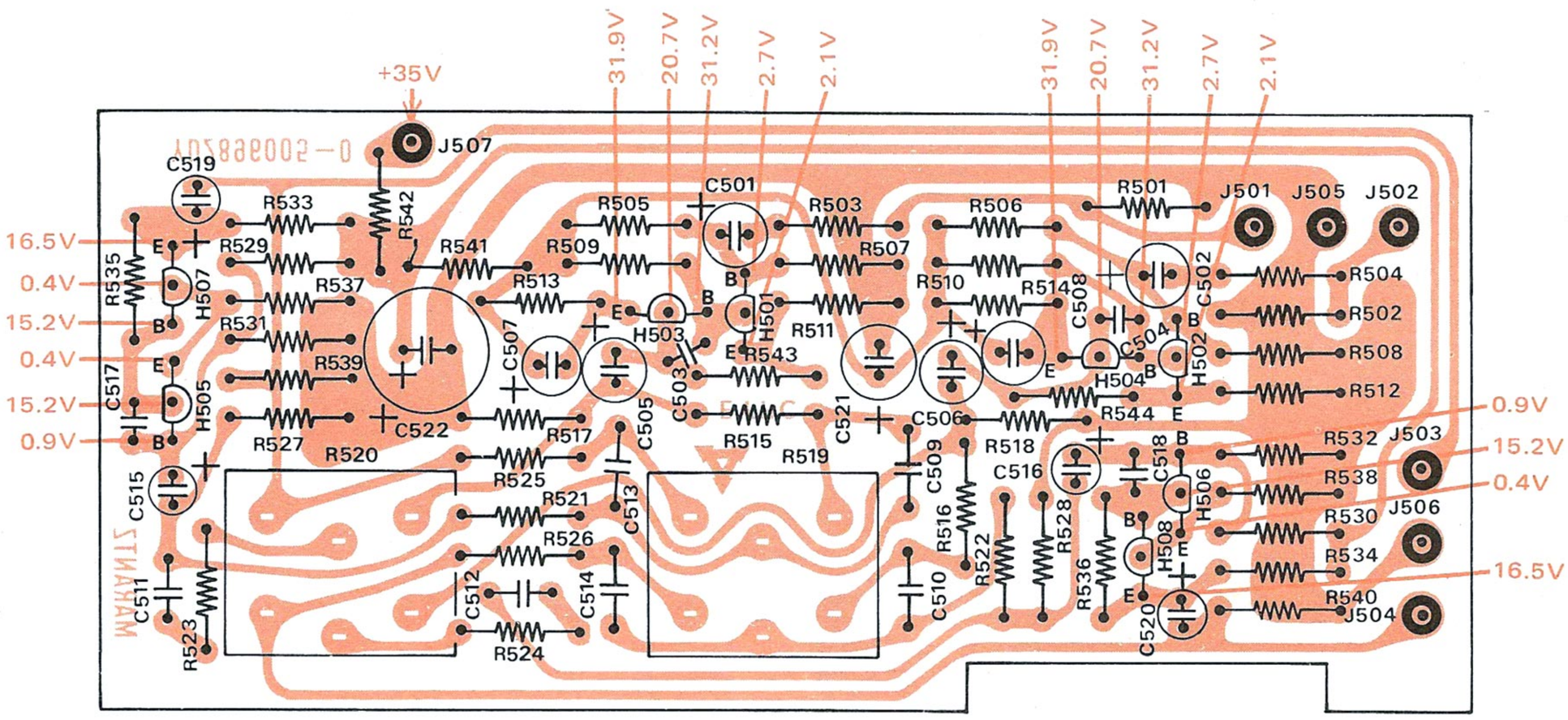

Figure 11. Tone Amplifier Unit Assembly P500 Component Locations

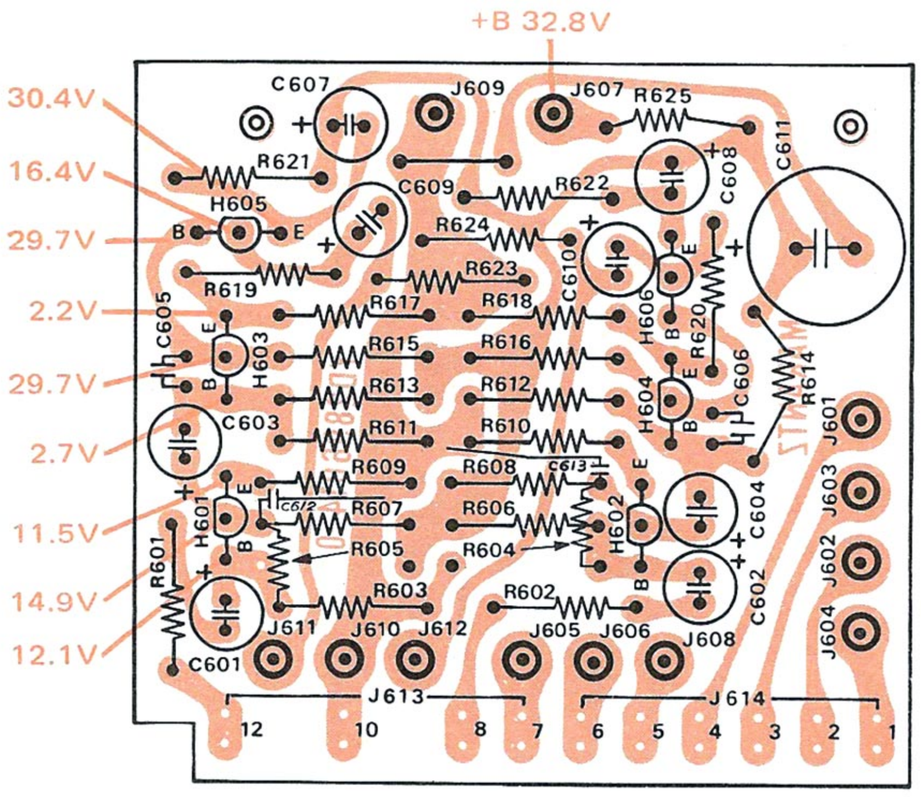

Figure 12. Front Channel Amplifier
sembly P600 Component Locations

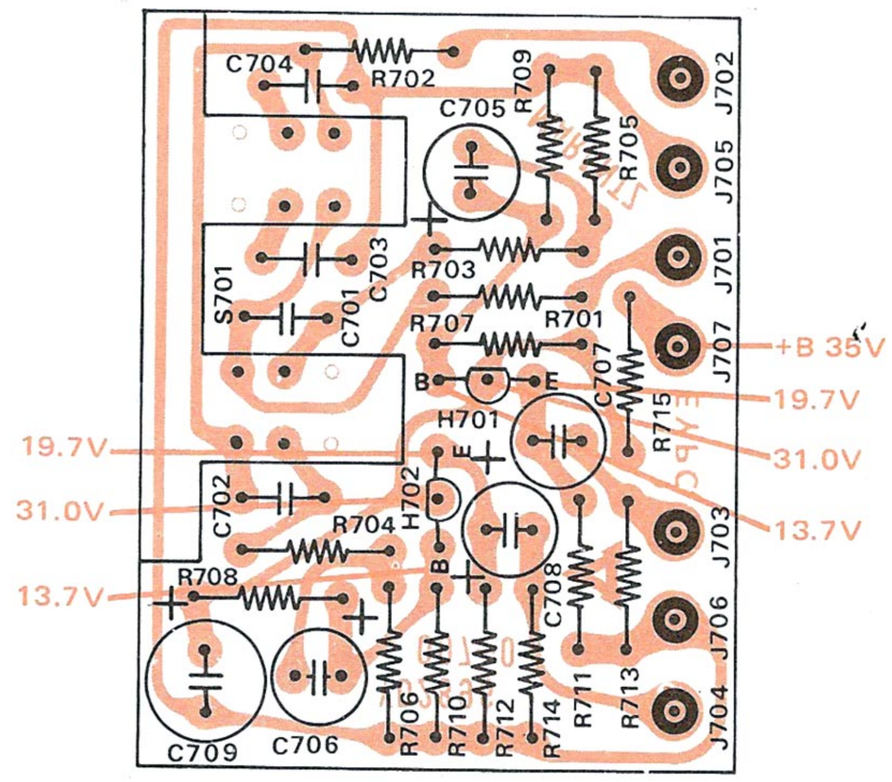

Figure 13. Rear Filter Switches and Buffer Amplifier
Assembly P700 Component Locations

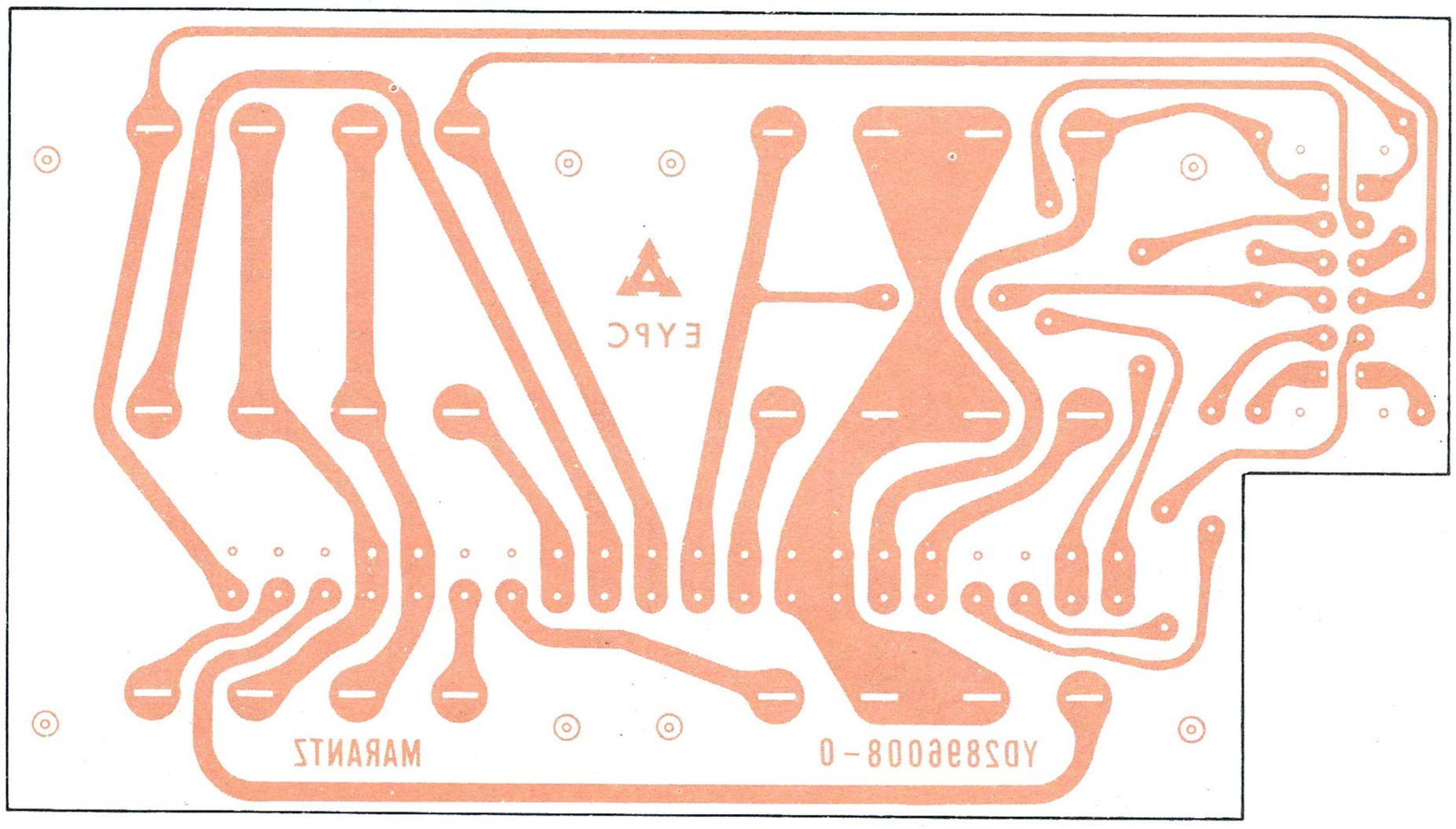

Figure 14. Speaker Terminals Unit Assembly P800 Component Locations

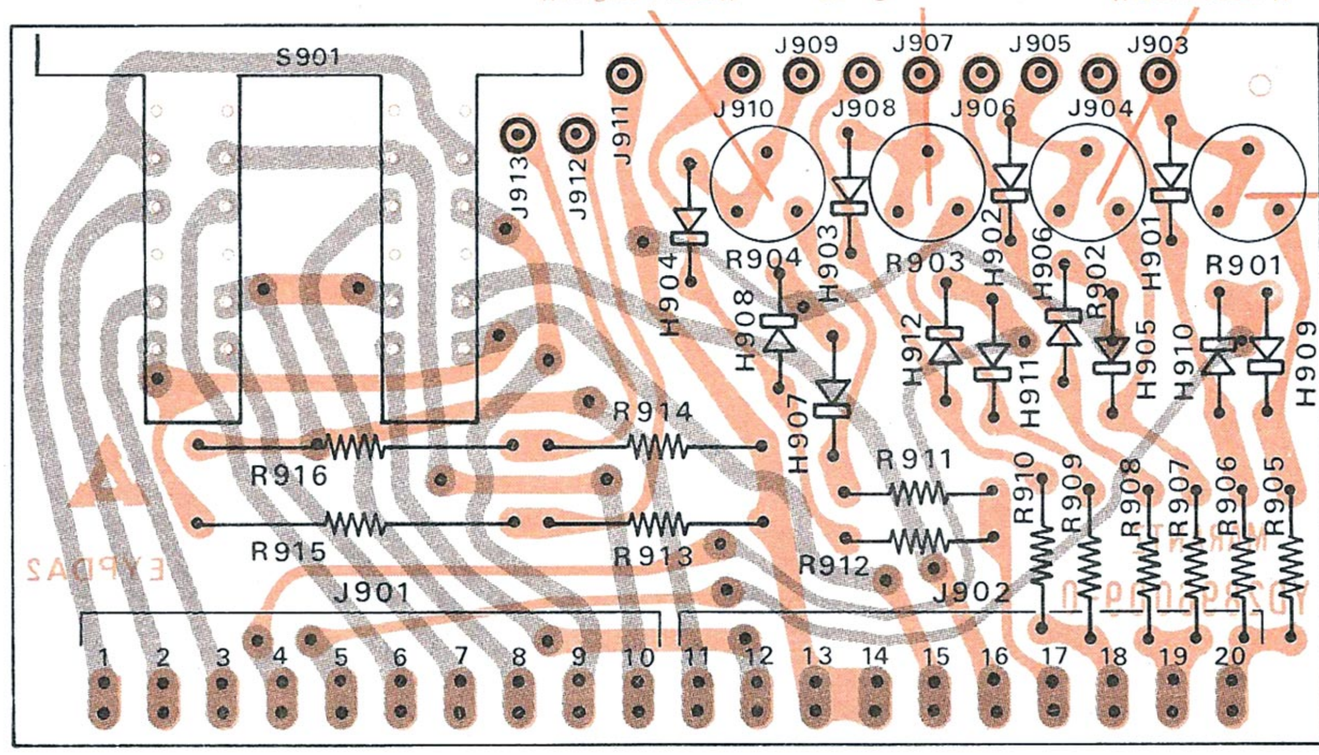

Figure 15. Meter Amplifier Assembly P900 Component Locations

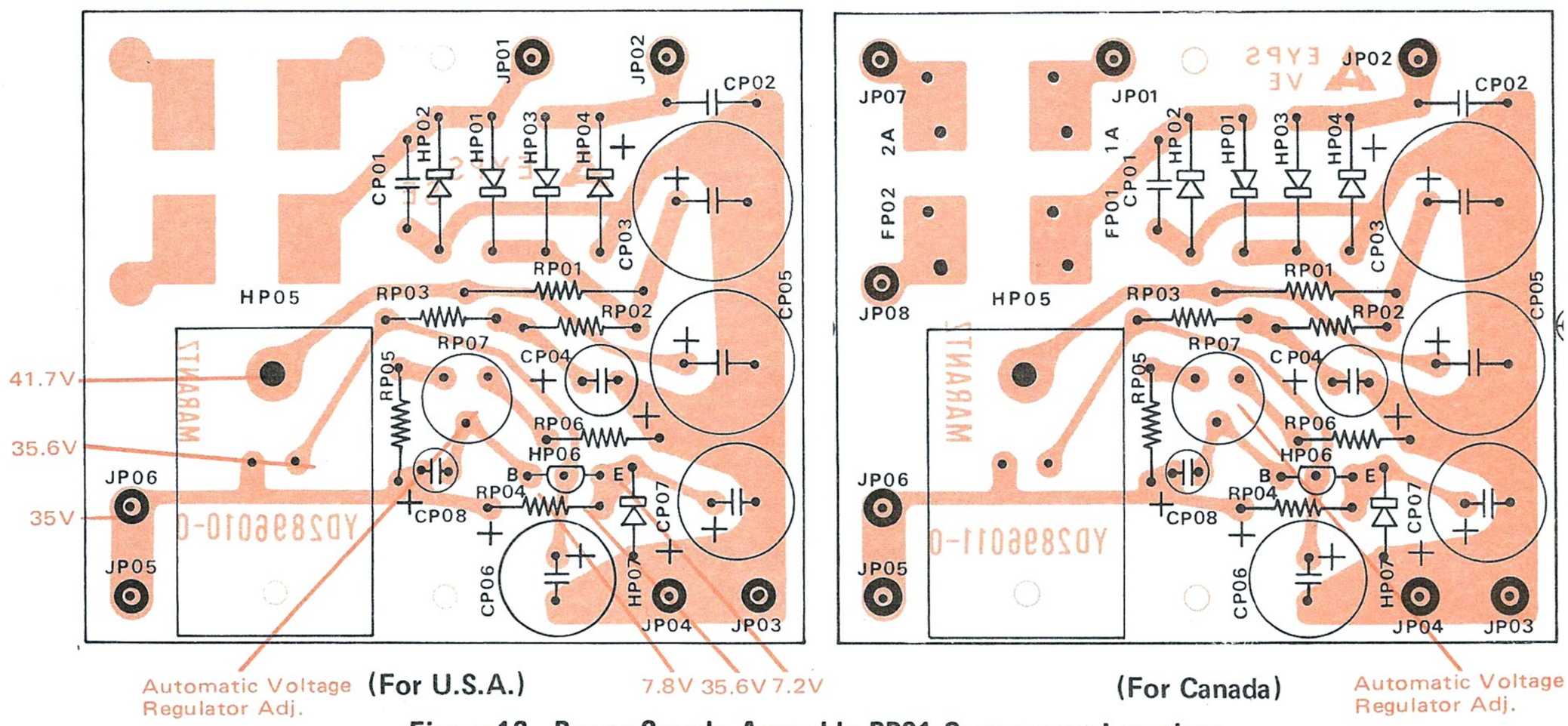

Figure 16. Power Supply Assembly PP01 Component Locations

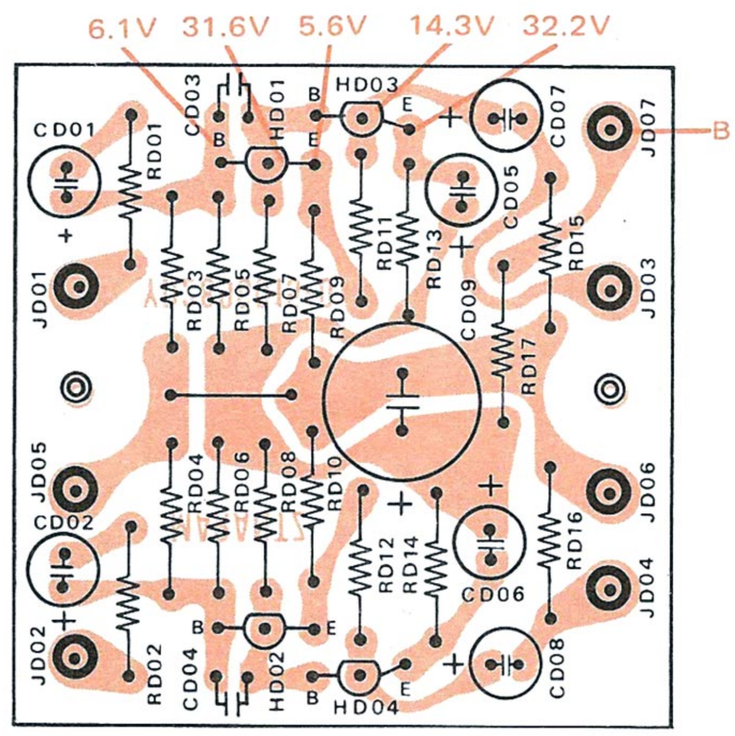

Figure 17. Rear Channel Amplifier Assembly PD01 Component Locations

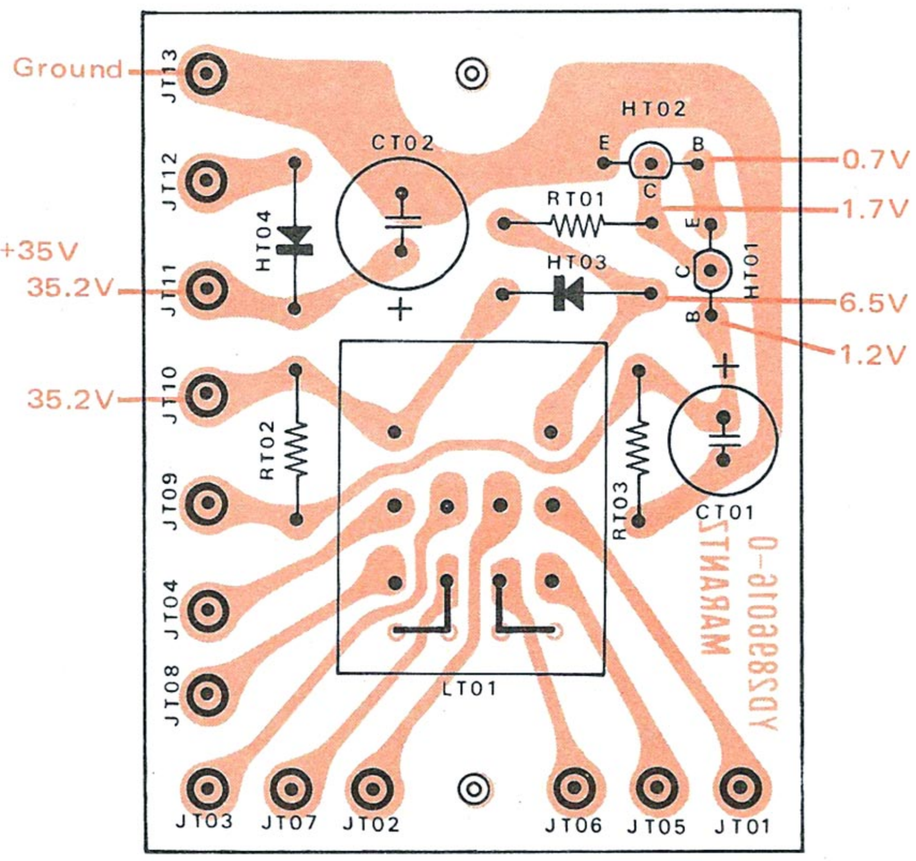

Figure 18. Relay Circuit Assembly PT01 Component Locations

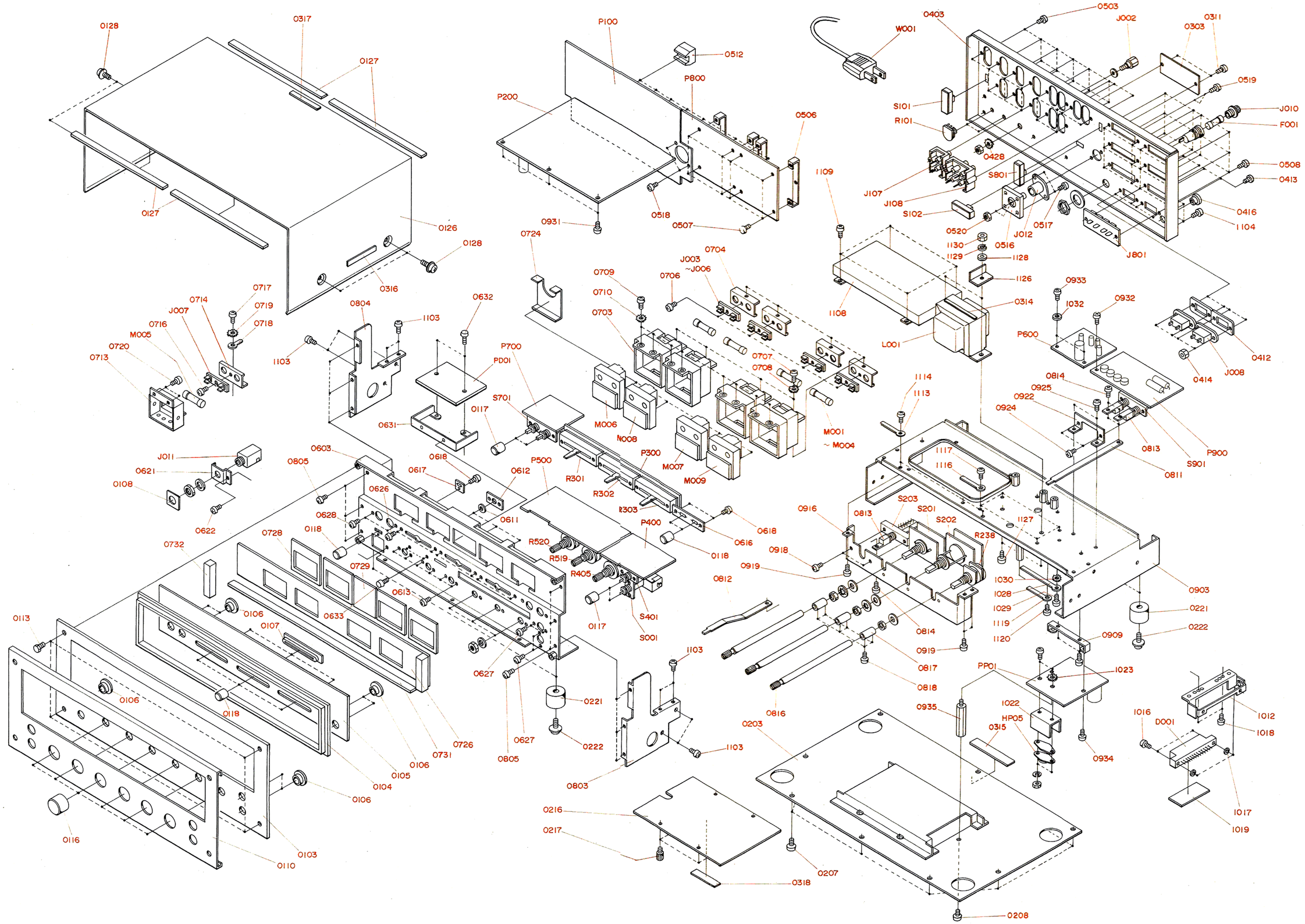

Figure 19. Exploded Mechanical Diagram

www.hifiengine.com

P100 . . . Input Output Terminal Unit
P200 . . . Buffer Amplifier, Vari-Matrix and Switches Unit
P300 . . . . . Balance Control Unit
P400 . . . Master Volume and Loudness Switch Unit
P500 . . . . . Tone Amplifier Unit
P600 . . . . . Front Channel Amplifier
P700 . . . . . Rear Filter Switches and Buffer Amplifier
P800 . . . . . Speaker Terminals Unit
P900 . . . . . Meter Amplifier
PP01 . . . . . Power Supply
PD01 . . . . . Rear Channel Amplifier
PT01 . . . . . Relay Circuit

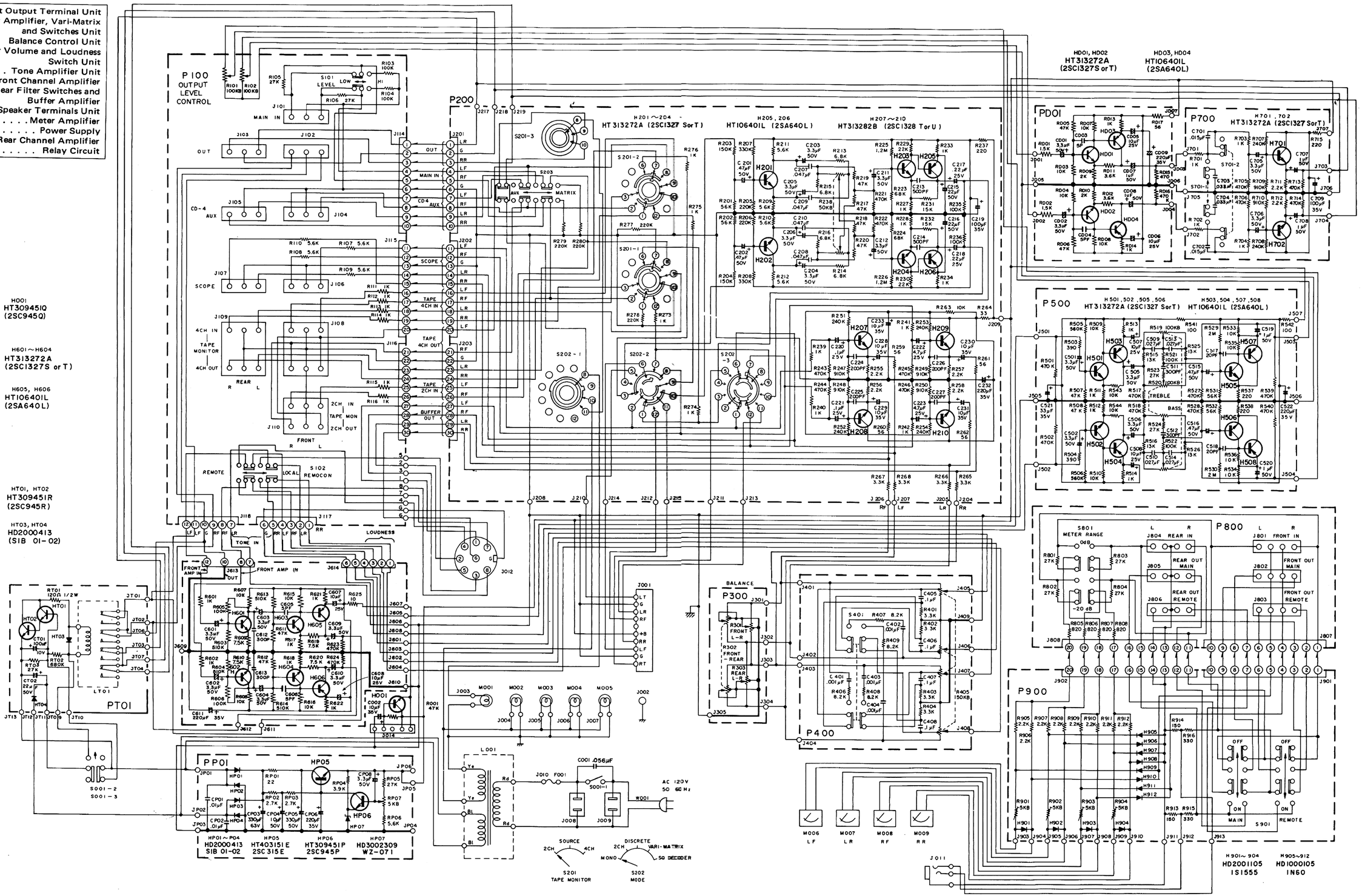

Figure 20. Schematic Diagram

PARTS LIST

REF. DESIG.	PART NO.	DESCRIPTION
A	289606340	Front Panel Assembly, For U.S.A.
A1	289606341	Front Panel Assembly, For Canada
0103	289606301	Escutcheon
0104	285540101	Frame
0105	289615801	Window
0106	288625901	Bush x 7
0107	285425901	Bush x 3
0110	289605301	Cover, For U.S.A.
		P200 ROTARY SWITCH BOARD
P200	YD2896002	P.W. Board, Rotary Switch, Print Only
	ZZ2896002	P.W. Board Assembly
		P200 RESISTORS
		All resistors are ±5% and ¼W, unless otherwise indicated.
R201	RT0556314	56KΩ
R202	RT0556314	56KΩ
R203	RT0515414	150KΩ
R204	RT0515414	150KΩ
R205	RT0522414	220KΩ
R206	RT0522414	220KΩ
R207	RT0533414	330KΩ
R208	RT0533414	330KΩ
R209	RT0556214	5.6KΩ
R210	RT0556214	5.6KΩ
R211	RT0556214	5.6KΩ
R212	RT0556214	5.6KΩ
R213	RT0568214	6.8KΩ
R214	RT0568214	6.8KΩ
R215	RT0568214	6.8KΩ
R216	RT0568214	6.8KΩ
R217	RT0547314	47KΩ
R218	RT0547314	47KΩ
R219	RT0547314	47KΩ
R220	RT0547314	47KΩ
R221	RT0547414	470KΩ
R222	RT0547414	470KΩ
R223	RT0568314	68KΩ
R224	RT0568314	68KΩ
R225	RT0512514	1.2MΩ
R226	RT0512514	1.2MΩ
R227	RT0510214	1KΩ
R228	RT0510214	1KΩ
R229	RT0522314	22KΩ
R230	RT0522314	22KΩ
R231	RT0515314	15KΩ
R232	RT0515314	15KΩ
R233	RT0510214	1KΩ
R234	RT0510214	1KΩ
R235	RT0510414	100KΩ
R236	RT0510414	100KΩ
R237	RT0522114	220Ω
R239	RT0510214	1KΩ
R240	RT0510214	1KΩ
R241	RT0510214	1KΩ
R242	RT0510214	1KΩ
R243	RT0547414	470KΩ
R244	RT0547414	470KΩ
R245	RT0547414	470KΩ
R246	RT0547414	470KΩ
R247	RT0591414	910KΩ
R248	RT0591414	910KΩ
R249	RT0591414	910KΩ

REF. DESIG.	PART NO.	DESCRIPTION
R250	RT0591414	910KΩ
R251	RT0524414	240KΩ
R252	RT0524414	240KΩ
R253	RT0524414	240KΩ
R254	RT0524414	240KΩ
R255	GU0522212	2.2KΩ ±5%, ½W
R256	GU0522212	2.2KΩ ±5%, ½W
R257	GU0522212	2.2KΩ ±5%, ½W
R258	GU0522212	2.2KΩ ±5%, ½W
R259	RT0556014	56Ω
R260	RT0556014	56Ω
R261	RT0556014	56Ω
R262	RT0556014	56Ω
R263	RT0510314	10KΩ
R264	RT0533014	33Ω
R265	RT0533214	3.3KΩ
R266	RT0533214	3.3KΩ
R267	RT0533214	3.3KΩ
R268	RT0533214	3.3KΩ
R273	RT0510214	1KΩ
R274	RT0510214	1KΩ
R275	RT0510214	1KΩ
R276	RT0510214	1KΩ
R277	RT0522414	220KΩ
R278	RT0522414	220KΩ
R279	RT0522414	220KΩ
R280	RT0522414	220KΩ
		P200 CAPACITORS
C201	EE4740501	Electroly, 0.47μF ±20%, 50V
C202	EE4740501	Electroly, 0.47μF ±20%, 50V
C203	EE3350501	Electroly, 3.3μF ±20%, 50V
C204	EE3350501	Electroly, 3.3μF ±20%, 50V
C205	EE3350501	Electroly, 3.3μF ±20%, 50V
C206	EE3350501	Electroly, 3.3μF ±20%, 50V
C207	DF1647305	Film, 0.047μF ±10%, 50V
C208	DF1647305	Film, 0.047μF ±10%, 50V
C209	DF1647305	Film, 0.047μF ±10%, 50V
C210	DF1647305	Film, 0.047μF ±10%, 50V
C211	EE3350501	Electroly, 3.3μF ±20%, 50V
C212	EE3350501	Electroly, 3.3μF ±20%, 50V
C213	DD1650101	Ceramic, 500PF ±10%, 50V
C214	DD1650101	Ceramic, 500PF ±10%, 50V
C215	EA2260509	Electroly, 22μF +100%, -10%, 50V
C216	EA2260509	Electroly, 22μF +100%, -10%, 50V
C217	EV2240251	Electroly, 0.22μF +40%, -20%, 25V
C218	EV2240251	Electroly, 0.22μF +40%, -20%, 25V
C219	EA1070359	Electroly, 100μF +100%, -10%, 35V
C220	EV1040251	Electroly, 0.1μF +40%, -20%, 25V
C221	EV1040251	Electroly, 0.1μF +40%, -20%, 25V
C222	EE4750251	Electroly, 4.7μF ±20%, 25V
C223	EE4750251	Electroly, 4.7μF ±20%, 25V
C224	DD1620101	Ceramic, 200PF ±10%, 50V
C225	DD1620101	Ceramic, 200PF ±10%, 50V
C226	DD1620101	Ceramic, 200PF ±10%, 50V
C227	DD1620101	Ceramic, 200PF ±10%, 50V
C228	EE1060351	Electroly, 10μF ±20%, 35V
C229	EE1060351	Electroly, 10μF ±20%, 35V
C230	EE1060351	Electroly, 10μF ±20%, 35V
C231	EE1060351	Electroly, 10μF ±20%, 35V
C232	EA2270359	Electroly, 220μF +100%, -10%, 35V
C233	EA1060359	Electroly, 10μF +100%, -10%, 35V

www.hifiengine.com

REF. DESIG.	PART NO.	DESCRIPTION
		P200 TRANSISTORS
H201	HT313272A	2SC1327S or T
H202	HT313272A	2SC1327S or T
H203	HT313272A	2SC1327S or T
H204	HT313272A	2SC1327S or T
H205	HT106401L	2SA640L
H206	HT106401L	2SA640L
H207	HT313282B	2SC1328T or U
H208	HT313282B	2SC1328T or U
H209	HT313282B	2SC1328T or U
H210	HT313282B	2SC1328T or U
		P200 PLUGS
J201	YP0600040	Plug
J202	YP0600040	Plug
J203	YP0600040	Plug
J204 ~ J215	YP1000113	Plug
J217	YP1000113	Plug
J218	YP1000113	Plug
J219	YP1000113	Plug
		GENERAL MISCELLANEOUS
0916	289616005	Bracket
R238	RM0503059	Variable Resist, 50KΩ (B)
S201	SR0803014	Rotary Switch, Tape Monitor
S202	SR1005006	Rotary Switch, Mode
S203	SP0601009	Push Switch, CD-4/AUX
0918	51100306A	B.H.M. Screw x 2 B3 x 6
0815	289127101	Holder
0817	289612501	Joint x 3
0818	51064019A	Screw x 6
1012	285110450	Retainer K
1016	51100310S	B.H.M. Screw x 2 B3 x 10
1017	59030805P	Washer x 2
1019	203912001	Insulator
J001	YJ0700006	Jack, SQ Decoder
		P600 FRONT AMP. BOARD
P600	YD2896014	P.W. Board, Front Amp., Print Only
	ZZ2896014	P.W. Board Assembly
		P600 RESISTORS
		All resistors are ±5% and ¼W.
R601	RT0510214	1KΩ
R602	RT0510214	1KΩ
R603	RT0551414	510KΩ
R604	RT0551414	510KΩ
R605	RT0510414	100KΩ
R606	RT0510414	100KΩ
R607	RT0510314	10KΩ
R608	RT0510314	10KΩ
R609	RT0556214	5.6KΩ
R610	RT0556214	5.6KΩ
R611	RT0547314	47KΩ
R612	RT0547314	47KΩ
R613	RT0551414	510KΩ
R614	RT0551414	510KΩ
R615	RT0510314	10KΩ
R616	RT0510314	10KΩ
R617	RT0510214	1KΩ
R618	RT0510214	1KΩ
R619	RT0575214	7.5KΩ

REF. DESIG.	PART NO.	DESCRIPTION
R620	RT0575214	7.5KΩ
R621	RT0510214	1KΩ
R622	RT0510214	1KΩ
R623	RT0547414	470KΩ
R624	RT0547414	470KΩ
R625	RT0510014	10Ω
		P600 TRANSISTORS
H601	HT313272A	2SC1327
H602	HT313272A	2SC1327
H603	HT313272A	2SC1327
H604	HT313272A	2SC1327
H605	HT106401L	2SA640L
H606	HT106401L	2SA640L
		P600 CAPACITORS
C601	EE3350501	Electroly, 3.3μF ± 20%, 50V
C602	EE3350501	Electroly, 3.3μF ± 20%, 50V
C603	EA3350509	Electroly, 3.3μF +100%, -10%, 50V
C604	EA3350509	Electroly, 3.3μF +100%, -10%, 50V
C605	DD1105001	Ceramic, 5PF ± 0.5PF, 50V
C606	DD1105001	Ceramic, 5PF ± 0.5PF, 50V
C607	EA1060259	Electroly, 10μF, 25V
C608	EA1060259	Electroly, 10μF, 25V
C609	EE3350501	Electroly, 3.3μF ± 20%, 50V
C610	EE3350501	Electroly, 3.3μF ± 20%, 50V
C611	EA2270359	Electroly, 220μF +100%, -10%, 35V
C612	DD1530102	Ceramic, 300PF ± 10%, 50V
C613	DD1530102	Ceramic, 300PF ± 10%, 50V
		P600 PLUGS :OUS
J601 ~ J612	YP1000113	Plug
J613	YP0600036	Plug
J614	YP0600036	Plug
		P900 METER LEVEL BOARD
P900	YD2896009	P.W. Board, Meter Level, Print Only
	ZZ2896009	P.W. Board Assembly
		P900 RESISTORS
		All resistors are ±5% and ¼W, unless otherwise indicated.
R901	RA0502013	Variable, 5KΩ (B)
R902	RA0502013	Variable, 5KΩ (B)
R903	RA0502013	Variable, 5KΩ (B)
R904	RA0502013	Variable, 5KΩ (B)
R905	RT0522214	2.2KΩ
R906	RT0522214	2.2KΩ
R907	RT0522214	2.2KΩ
R908	RT0522214	2.2KΩ
R909	RT0522214	2.2KΩ
R910	RT0522214	2.2KΩ
R911	RT0522214	2.2KΩ
R912	RT0522214	2.2KΩ
R913	GU0515112	150Ω ± 5%, ½W
R914	GU0515112	150Ω ± 5%, ½W
R915	GJ0533102	330Ω ± 5%, 2W
R916	GJ0533102	330Ω ± 5%, 2W

www.hifiengine.com

REF. DESIG.	PART NO.	DESCRIPTION
		P900 DIODES
H901 ~ H904	HD2001105	1S1555
H905 ~ H912	HD1000105	1N60
		P900 MISCELLANEOUS
S901	SP0402007	Push Switch
J901	YP0600040	Plug
J902	YP0600040	Plug
J903 ~ J913	YP1000113	Plug
0922	289616006	Bracket
0924	51100306A	B.H.M. Screw x 2
0813	289127101	Holder x 2
		PP01 POWER SUPPLY BOARD
PP01	YD2896010	P.W. Board, Power Supply, Print Only, For U.S.A.
	ZZ2896010	P.W. Board Assembly, For U.S.A.
PP01	YD2896011	P.W. Board, Power Supply, Print Only, For Canada
	ZZ2896011	P.W. Board Assembly, For Canada
		PP01 RESISTORS
RP01	GJ1022002	22Ω ± 10%, 2W
RP02	RT0527214	2.7KΩ ± 5%, ¼W
RP03	RT0527214	2.7KΩ ± 5%, ¼W
RP04	RT0539214	3.9KΩ ± 5%, ¼W
RP05	RT0527314	27KΩ ± 5%, ¼W
RP06	RT0556214	5.6KΩ ± 5%, ¼W
RP07	RA0502013	Variable, 5KΩ (B)
		PP01 CAPACITORS
CP01	DK1810351	Ceramic, 0.01μF +100%, -0%, 500V
CP02	DK1810351	Ceramic, 0.01μF +100%, -0%, 500V
CP03	EA3370631	Electroly, 330μF +100%, -10%, 63V
CP04	EA1060509	Electroly, 10μF +100%, -10%, 50V
CP05	EA3370509	Electroly, 330μF +100%, -10%, 50V
CP06	EA2270359	Electroly, 220μF +100%, -10%, 35V
CP08	EA3350509	Electroly, 3.3μF +100%, -10%, 50V
		PP01 SEMICONDUCTORS
HP01	HD2000413	Diode, SIB01-02
HP02	HD2000413	Diode, SIB01-02
HP03	HD2000413	Diode, SIB01-02
HP04	HD2000413	Diode, SIB01-02
HP05	HT403151E	Transistor, 2SD315E
HP06	HT309451P	Transistor, 2SC945P
HP07	HD3002309	Diode, WZ-071
		PP01 MISCELLANEOUS
1022	273026702	Heat Sink
1023	54050300R	T.L. Washer OR
JP01 ~ JP06	YP1000113	Plug
JP07	YP1000113	Plug, For Canada
JP08	YP1000113	Plug, For Canada
JP09 ~ JP12	YJ0800020	Socket, For Canada

REF. DESIG.	PART NO.	DESCRIPTION
		PT01 RELAY BOARD
PT01	YD2896016	P.W. Board, Relay, Print Only
	ZZ2896016	P.W. Board Assembly
		PT01 MISCELLANEOUS
LT01	LY4024003	Relay
HT01	HT309451R	Transistor, 2SC945R
HT02	HT309451R	Transistor, 2SC945R
HT03	HD2000413	Diode, SIB01-02
HT04	HD2000413	Diode, SIB01-02
RT01	GU0512112	Resistor, 120Ω ± 5%, ½W
RT02	RT0568414	Resistor, 680KΩ ± 5%, ¼W
RT03	RT0527314	Resistor, 27KΩ ± 5%, ¼W
CT01	EA1070109	Electroly Capacitor, 100μF +100%, -10%, 10V
CT02	EA2260509	Electroly Capacitor, 22μF +100%, -10%, 50V
JT01 ~ JT04	YP1000113	Plug
JT06	YP1000113	Plug
JT07	YP1000113	Plug
JT09 ~ JT13	YP1000113	Plug
		GENERAL MISCELLANEOUS
0611	289100402	Table x 3
0612	289100510	Clamper x 3
0613	51100306A	B.H.M. Screw x 6
0616	289605101	Guide
0617	289105101	Guide
0618	51570305B	P.H. Tapt Screw x 3
0603	289616050	Bracket K
0728	287105302	Cover x 4
0803	289616003	Bracket
0804	289616004	Bracket
0805	51100306A	B.H.M. Screw x 6 B 3 x 6
0828	51102604A	B.H.M. Screw x 2 B 2.6 x 4
0833	51102604A	B.H.M. Screw x 2 B 2.6 x 4
0622	51100306A	B.H.M. Screw B 3 x 6
0626	51100306A	B.H.M. Screw x 6 B 3 x 6
0627	51100306A	B.H.M. Screw x 4 B 3 x 6
0628	51100310A	B.H.M. Screw x 2 B 3 x 10
0633	51100304A	B.H.M. Screw x 2 B 3 x 4
0709	51570306B	P.H. Tapt Screw x 8
0710	54050300R	T.L. Washer OR x 8
0720	51570306B	P.H. Tapt Screw x 2 P 3 x 6 ST
S001	SP0301001	Push Switch, Power
0826	289610901	Shield
0827	289612002	Insulator
0832	289612003	Insulator
0831	289610902	Shield
J011	YJ0100081	Jack, Headphone
0621	289627101	Holder
		P300 BALANCE CONT. BOARD
P300	YD2896003	P.W. Board, Balance, Print Only
	ZZ2896003	P.W. Board Assembly

www.hifiengine.com

REF. DESIG.	PART NO.	DESCRIPTION
		P300 MISCELLANEOUS
R301	RX0503008	Variable Resistor
R302	RS0503021	Variable Resistor
R303	RX0503008	Variable Resistor
J301 ~ J305	YP1000113	Plug
		P400 VOLUME CONT. BOARD
P400	YD2896004	P.W. Board, Volume Control, Print Only
	ZZ2896004	P.W. Board Assembly
		P400 RESISTORS
R401	RT0533214	3.3KΩ ±5%, ¼W
R402	RT0533214	3.3KΩ ±5%, ¼W
R403	RT0533214	3.3KΩ ±5%, ¼W
R404	RT0533214	3.3KΩ ±5%, ¼W
R405	RG0503003	Variable, 50KΩ (B)
R406	RT0582214	8.2KΩ ±5%, ¼W
R407	RT0582214	8.2KΩ ±5%, ¼W
R408	RT0582214	8.2KΩ ±5%, ¼W
R409	RT0582214	8.2KΩ ±5%, ¼W
		P400 CAPACITORS
C401	DF1610205	Film, 0.001μF ±10%, 50V
C402	DF1610205	Film, 0.001μF ±10%, 50V
C403	DF1610205	Film, 0.001μF ±10%, 50V
C404	DF1610205	Film, 0.001μF ±10%, 50V
C405	DF1610405	Film, 0.1μF ±10%, 50V
C406	DF1610405	Film, 0.1μF ±10%, 50V
C407	DF1610405	Film, 0.1μF ±10%, 50V
C408	DF1610405	Film, 0.1μF ±10%, 50V
		P400 MISCELLANEOUS
J401 ~ J409	YP1000114	Plug
S401	SP0401013	Push Switch, Loudness
		P500 TONE CONTROL BOARD
P500	YD2896005	P.W. Board, Tone Control, Print Only
	ZZ2896005	P.W. Board Assembly
		P500 RESISTORS
		All resistors are ±5% and ¼W, unless otherwise indicated.
R501	RT0547414	470KΩ
R502	RT0547414	470KΩ
R503	RT0539114	390Ω
R504	RT0539114	390Ω
R505	RT0556414	560KΩ
R506	RT0556414	560KΩ
R507	RT0547314	47KΩ
R508	RT0547314	47KΩ
R509	RT0510314	10KΩ
R510	RT0510314	10KΩ
R511	RT0510214	1KΩ
R512	RT0510214	1KΩ
R513	RT0510214	1KΩ
R514	RT0510214	1KΩ
R515	RT0513314	13KΩ
R516	RT0513314	13KΩ
R517	RT0547414	470KΩ

REF. DESIG.	PART NO.	DESCRIPTION
R518	RT0547414	470KΩ
R519	RM0104007	Variable, 100KΩ (B)
R520	RM0104007	Variable, 100KΩ (B)
R521	RT0510414	100KΩ
R522	RT0510414	100KΩ
R523	RT0527314	27KΩ
R524	RT0527314	27KΩ
R525	RT0513314	13KΩ
R526	RT0513314	13KΩ
R527	RT0547414	470KΩ
R528	RT0547414	470KΩ
R529	RT0520514	2MΩ
R530	RT0520514	2MΩ
R531	RT0556314	56KΩ
R532	RT0556314	56KΩ
R533	RT0510314	10KΩ
R534	RT0510314	10KΩ
R535	RT0510314	10KΩ
R536	RT0510314	10KΩ
R537	RT0522114	220Ω
R538	RT0522114	220Ω
R539	RT0547414	470KΩ
R540	RT0547414	470KΩ
R541	RT0510114	100Ω
R542	RT0510114	100Ω
R543	RT0510314	10KΩ
R544	RT0510314	10KΩ
		P500 TRANSISTORS
H501	HT313272A	2SC1327S or T
H502	HT313272A	2SC1327S or T
H503	HT106401L	2SA640L
H504	HT106401L	2SA640L
H505	HT313272A	2SC1327S or T
H506	HT313272A	2SC1327S or T
H507	HT106401L	2SA640L
H508	HT106401L	2SA640L
		P500 CAPACITORS
C501	EE3350501	Electroly, 3.3μF ±20%, 50V
C502	EE3350501	Electroly, 3.3μF ±20%, 50V
C505	EE3350501	Electroly, 3.3μF ±20%, 50V
C506	EE3350501	Electroly, 3.3μF ±20%, 50V
C507	EA1060259	Electroly, 10μF +100%, -10%, 25V
C508	EA1060259	Electroly, 10μF +100%, -10%, 25V
C509	DF1627305	Film, 0.027μF ±10%, 50V
C510	DF1627305	Film, 0.027μF ±10%, 50V
C511	DD1530102	Ceramic, 300PF ±5%, 50V
C512	DD1530102	Ceramic, 300PF ±5%, 50V
C513	DF1627305	Film, 0.027μF ±10%, 50V
C514	DF1627305	Film, 0.027μF ±10%, 50V
C515	EE4740501	Electroly, 0.47μF ±20%, 50V
C516	EE4740501	Electroly, 0.47μF ±20%, 50V
C517	DD1620001	Ceramic, 20PF ±10%, 50V
C518	DD1620001	Ceramic, 20PF ±10%, 50V
C519	EE1050501	Electroly, 1μF ±20%, 50V
C520	EE1050501	Electroly, 1μF ±20%, 50V
C521	EA3360359	Electroly, 33μF +100%, -10%, 35V
C522	EA2270359	Electroly, 220μF +100%, -10%, 35V
		P500 PLUGS
J501 ~ J507	YP1000114	Plug

www.hifiengine.com

REF. DESIG.	PART NO.	DESCRIPTION
		P700 REAR PRE OUT AMP. BOARD
P700	YD2896007	P.W. Board, Pre Out Amp., Print Only
	ZZ2896007	P.W. Board Assembly
		P700 RESISTORS
		All resistors are ±5% and ¼W, unless otherwise indicated.
R701	RT0510214	1KΩ
R702	RT0510214	1KΩ
R703	RT0510214	1KΩ
R704	RT0510214	1KΩ
R705	RT0547414	470KΩ
R706	RT0547414	470KΩ
R707	RT0524414	240KΩ
R708	RT0524414	240KΩ
R709	RT0591414	910KΩ
R710	RT0591414	910KΩ
R711	GU0522212	2.2KΩ ±5%, ½W
R712	GU0522212	2.2KΩ ±5%, ½W
R713	RT0547414	470KΩ
R714	RT0547414	470KΩ
R715	RT0522114	220Ω
		P700 TRANSISTORS
H701	HT313272A	2SC1327S or T
H702	HT313272A	2SC1327S or T
		P700 CAPACITORS
C701	DF1615305	Film, 0.015μF ±10%, 50V
C702	DF1615305	Film, 0.015μF ±10%, 50V
C703	DF1633305	Film, 0.033μF ±10%, 50V
C704	DF1633305	Film, 0.033μF ±10%, 50V
C705	EE3350501	Electroly, 3.3μF ±20%, 50V
C706	EE3350501	Electroly, 3.3μF ±20%, 50V
C707	EE1050501	Electroly, 1μF ±20%, 50V
C708	EE1050501	Electroly, 1μF ±20%, 50V
C709	EA1070359	Electroly, 100μF +100%, -10%, 35V
		P700 MISCELLANEOUS
S701	SP0202008	Push Switch, Hi-Low Filter
J701 ~ J707	YP1000113	Plug
		PD01 REAR AMP. BOARD
PD01	YD2896015	P.W. Board, Rear Amp., Print Only
	ZZ2896015	P.W. Board Assembly
		PD01 RESISTORS
		All resistors are ±5% and ¼W.
RD01	RT0515214	1.5KΩ
RD02	RT0515214	1.5KΩ
RD03	RT0510314	10KΩ
RD04	RT0510314	10KΩ
RD05	RT0547314	47KΩ
RD06	RT0547314	47KΩ
RD07	RT0510314	10KΩ
RD08	RT0510314	10KΩ
RD09	RT0520214	2KΩ
RD10	RT0520214	2KΩ
RD11	RT0536214	3.6KΩ
RD12	RT0536214	3.6KΩ
RD13	RT0510214	1KΩ
RD14	RT0510214	1KΩ
RD15	RT0547414	470KΩ

REF. DESIG.	PART NO.	DESCRIPTION
RD16	RT0547414	470KΩ
RD17	RT0556014	56Ω
		PD01 CAPACITORS
CD01	EE3350501	Electroly, 3.3μF ±20%, 50V
CD02	EE3350501	Electroly, 3.3μF ±20%, 50V
CD03	DD1105001	Ceramic, 5PF ±0.5PF, 50V
CD04	DD1105001	Ceramic, 5PF ±0.5PF, 50V
CD05	EA1060259	Electroly, 10μF +100%, -10%, 25V
CD06	EA1060259	Electroly, 10μF +100%, -10%, 25V
CD07	EE1050501	Electroly, 1μF ±20%, 50V
CD08	EE1050501	Electroly, 1μF ±20%, 50V
CD09	EA2270359	Electroly, 220μF +100%, -10%, 35V
		PD01 MISCELLANEOUS
0631	289616008	Bracket
0632	51100306S	B.H.M. Screw x 2 B 3 x 6
HD01	HT313272A	Transistor, 2SC1327S or T
HD02	HT313272A	Transistor, 2SC1327S or T
HD03	HT106401L	Transistor, 2SA640L
HD04	HT106401L	Transistor, 2SA640L
JD01 ~ JD07	YP1000113	Plug
		GENERAL MISCELLANEOUS
M007	IM1104206	D.C. Meter, Right
0724	288610701	Sheet
M006	IM1104205	D.C. Meter, Left
0725	288610701	Sheet
M009	IM1104206	D.C. Meter, Right
0727	288610701	Sheet
M008	IM1104205	D.C. Meter, Left
0730	288610701	Sheet
0713	285327402	Reflector
0714	285327102	Holder
0716	51570306B	P.H. Tapt Screw P 3 x 6 ST
0717	51100306A	B.H.M. Screw B 3 x 6
0718	62031650W	Lug
0719	54050300R	T.L. Washer OR
M001	IN1008007	Lamp
J003	YJ0800019	Socket, Lamp
0703	285427401	Reflector
0704	285427101	Holder
0706	51570306B	P.H. Tapt Screw P 3 x 6 ST
0707	51100306A	B.H.M. Screw B 3 x 6
0708	54050300R	T.L. Washer OR
M002	IN1008007	Lamp
J004	YJ0800019	Socket
0711	285427401	Reflector
0721	285427101	Holder
0705	51570306B	P.H. Tapt Screw P 3 x 6 ST
0723	51100306A	B.H.M. Screw B 3 x 6
0734	54050300R	T.L. Washer OR

www.hifiengine.com

REF. DESIG.	PART NO.	DESCRIPTION
M003	IN1008007	Lamp
J005	YJ0800019	Socket
0712	285427401	Reflector x 2
0722	285427101	Holder x 2
0715	51570306B	P.H. Tapt Screw x 2 P 3 x 6 ST
0735	54050300R	T.L. Washer OR x 2
M004	IN1008007	Lamp
M005	IN1008007	Lamp
J006	YJ0800019	Socket
J007	YJ0800019	Socket
0733	51100306A	B.H.M. Screw x 2 B 3 x 6
0726	289630201	Dial
0729	289610702	Sheet
1113	121000501	Clamper x 2
1116	138200503	Clamper x 4
1119	138200503	Clamper
H001	HT309451Q	Transistor, 2SC945Q
R001	RT0547314	Resistor, 47KΩ ±5%, ¼W
C002	EA1060359	Electroly Capacitor, 10μF +100%, -10%, 35V
J014	YL0105003	Terminal
0403	289616001	Bracket
0416	145525903	Bush
0417	284906701	Cap
0428	54050400R	T.L. Washer OR
J008	YJ0400048	Jack, AC Outlet
J009	YJ0400048	Jack, AC Outlet
J010	YJ0800012	Socket, Fuse Holder
J002	YT0101003	Terminal, Ground
F001	FS1010008	Fuse, 1A (UL)
F002	FS2010090	Fuse, 1A, For Canada
W001	YC0240010	AC Cord
C001	DF1756351	Ceramic Capacitor, 0.056μF, 250V
0503	51100308S	B.H.M. Screw x 13 B 3 x 8
0508	51100306S	B.H.M. Screw x 12 B 3 x 6
0519	51100314S	B.H.M. Screw x 2 B 3 x 14
0412	289611801	Spacer x 2
0413	51100308S	B.H.M. Screw x 4 B 3 x 8
0414	53110303A	Hexagon Nut x 4
0415	54050300R	T.L. Washer OR x 4
		P800 SPEAKER TERMINAL BOARD
P800	YD2896008	P.W. Board, Speaker Terminal, Print Only
	ZZ2896008	P.W. Board Assembly
		P800 RESISTORS
		All resistors are ±5% and ¼W.
R801	RT0527314	27KΩ
R802	RT0527314	27KΩ
R803	RT0527314	27KΩ
R804	RT0527314	27KΩ
R805	RT0582114	820Ω
R806	RT0582114	820Ω
R807	RT0582114	820Ω
R808	RT0582114	820Ω

REF. DESIG.	PART NO.	DESCRIPTION
		P800 MISCELLANEOUS
0506	289616007	Bracket x 4
0507	51100306S	B.H.M. Screw x 8 B 3 x 6
0513	289605601	Buffer x 2
J801 ~ J806	YT0304001	Terminal, Speaker
J807	YJ0600040	Socket
J808	YJ0600040	Socket
S801	SS0402025	Slide Switch 0 ~ 20dB
		P100 IN-OUT TERMINAL BOARD
P100	YD2896001	P.W. Board, In-Out Terminal, Print Only
	ZZ2896001	P.W. Board Assembly
		P100 RESISTORS
		All resistors are ±5% and ¼W, unless otherwise indicated.
R101	RK0104015	Variable, 100KΩ (B)
R102	RK0104015	Variable, 100KΩ (B)
R103	RT0510414	100KΩ
R104	RT0510414	100KΩ
R105	RT0527314	27KΩ
R106	RT0527314	27KΩ
R107	RT0556214	5.6KΩ
R108	RT0556214	5.6KΩ
R109	RT0556214	5.6KΩ
R110	RT0556214	5.6KΩ
R111	RT0510214	1KΩ
R112	RT0510214	1KΩ
R113	RT0510214	1KΩ
R114	RT0510214	1KΩ
R115	RT0510214	1KΩ
R116	RT0510214	1KΩ
		P100 MISCELLANEOUS
S101	SS0202036	Slide Switch, Level Hi-Low
S102	SS0402025	Slide Switch, Remocon.
J012	YJ1100012	Jack, Remocon.
0516	289227103	Holder
0517	51380306T	P.H. Tap Screw x 2
0518	51380306T	P.H. Tap Screw x 2
0520	53110303E	Hexagon Nut x 2
0512	289605601	Buffer x 5
J101 ~ J107	YT0202010	Terminal
J108 ~ J110	YT0204007	Terminal
J114	YJ0600040	Socket
J115	YJ0600040	Socket
J116	YJ0600040	Socket
J117	YJ0600036	Socket
J118	YJ0600036	Socket
		GENERAL MISCELLANEOUS

www.hifiengine.com

REF. DESIG.	PART NO.	DESCRIPTION
0903	289610550	Chassis K
0909	285116005	Bracket
0919	51570306B	P.H. Tapt Screw x 3 P 3 x 6 ST
0925	51570306B	P.H. Tapt Screw x 2 P 3 x 6 ST
1106	51100306S	B.H.M. Screw x 2 B 3 x 6
0931	51100306S	B.H.M. Screw x 3 B 3 x 6
0932	51100306S	B.H.M. Screw B 3 x 6
0933	51100306S	B.H.M. Screw x 2 B 3 x 6
0934	51100306S	B.H.M. Screw B 3 x 6
0221	275905701	Leg x 4
0222	51490410S	B.H.M. Screw x 4
L001	TS1601403	Power Transf.
1126	289610401	Retainer x 2
1127	51100408E	B.H.M. Screw x 2 B 4 x 8
1128	54020401E	Flat Washer P x 2
1129	54040402N	Spring Washer x 2
1130	53110403E	Hexagon Nut x 2
0811	289635401	Lever x 2
0812	289635402	Lever
0814	51100306S	B.H.M. Screw x 3 B 3 x 6
0816	289611201	Shaft x 3
0935	289610104	Support
0314	288686101	Label, Marantz ON Power Transf.
1033	59030805P	Washer x 2
1018	51100306S	B.H.M. Screw x 2 B 3 x 6
1028	287100501	Clamper
1029	51570306B	P.H. Tapt Screw P 3 x 6 ST
1030	54050300R	T.L. Washer OR
1103	51570306B	P.H. Tapt Screw x 8 P 3 x 6 ST
1104	51100306S	B.H.M. Screw x 4 B 3 x 6
1110	285016005	Bracket
1111	51100304A	B.H.M. Screw x 2 B 3 x 4
1108	289605302	Cover
1109	51570305B	P.H. Tapt Screw x 4 P 3 x 5 ST
1114	51570306B	P.H. Tapt Screw x 2 P 3 x 6 ST
1117	51570306B	P.H. Tapt Screw x 4 P 3 x 6 ST
1120	51570306B	P.H. Tapt Screw P 3 x 6 ST
0331	951061101	Label, For Canada
0332	951061102	Label, For Canada
0334	951022101	Label, x 2, For Canada
0731	285500701	Strip
0732	287311801	Spacer x 2
0108	289610701	Sheet
0113	52017039J	Bolt x 4
0116	281815403	Knob x 6 Vol. Mode ...
0117	281815401	Knob x 4 Power, Loudness ...
0118	285015401	Knob x 6 Balance ...
0126	289625701	Lid, Case Upper
0127	257711803	Spacer x 4
0128	51480406S	B.H.M. Screw F x 4
0203	289625750	Lid K
0207	51100406S	B.H.M. Screw x 8 B 4 x 6
0208	51100306S	B.H.M. Screw B 3 x 6
FP01	FS1010090	Fuse, 1A, For Canada
FP02	FS1020090	Fuse, 2A, For Canada
0226	289606450	Case K, Wooden, For Canada
0228	288200301	Punched Plate, For Canada
0229	288205701	Leg, x 4, For Canada

REF. DESIG.	PART NO.	DESCRIPTION
0231	52010420A	H. Head Bolt, x 4, For Canada
0232	54080400R	T.L. Washer RR, x 4, For Canada
0303	289626501	Indicator, Model No.,
0304	289626502	Indicator, Model No., For Canada
0311	51100306S	B.H.M. Screw x 2
0315	257886101	Label, UL Caution For U.S.A. x 1, For Canada x 2
0316	257886102	Label, Do not remove cover.
0317	257886103	Label, See marking on bottom.
0319	951021101	Label, Shower Caution
0321	951110104	Label, UL
0322	951091102	Label, UL Factory Cord NO.
0324	245786104	Label, CSA, For Canada
0325	951091101	Label, LL NO., For Canada
0326	282186102	Label, Fuse Caution, For Canada
0333	951061101	Label, Fuse, For Canada
1423	952281501	Serial NO Card x 4
1424	952301512	Serial NO Card x 4, For Canada
1203	289685101	Instructions, Set
1213	289685601	Schematic Diagram
1214	289685602	Schematic Diagram, For Canada
1223	289685107	Instructions, Cabinet Mounting Template
1224	288585108	Instructions, Accessories Chart
1226	281885104	Instructions, Packing
1228	288585110	Instructions, Accessories, For Canada
0216	285125703	Lid, SQ
0217	51216059E	Screw x 4, For SQ Lid
0318	285386101	Label, To Install Optional
1306	257785450	Guarantee Card K
1403	289680101	Packing Case Set Inner
1404	289680111	Packing Case Set Outer
1406	289680102	Packing Case, Wooden Case Inner, For Canada
1407	289680112	Packing Case, Wooden Case Outer, For Canada
1409	289680301	Partitioner x 2, Set
1410	288480303	Partitioner x 2, Wooden Case, For Canada
1413	901433533	Polyethylen Bag, For Set
1414	901453535	Polyethylen Bag, Wooden Case, For Canada
1415	901302501	Polyethylen Bag, For Printed Matter.
1418	102980401	Sleeve, For AC Cord
1419	273182101	Silicagel x 2

www.hifiengine.com

TECHNICAL SPECIFICATIONS

Output Voltage at 47Kohms Load, Both Channels Operating Simultaneously, 20Hz, to 20,000Hz	FRONT Channel: 1V REAR Channel: 2V
High-level Hum and Noise	0.3mV
I.M. Distortion (SMPTE) at 47Kohms Load (FRONT Channel 1V, REAR Channel 2V)	0.1%
Total Harmonic Distortion at 47Kohms Load (FRONT Channel 1V, REAR Channel 2V)	0.1% Maximum
Input Sensitivity (FRONT Channel 1V Output, REAR Channel 2V Output)	180mV
Input Impedance	100Kohms
Channel Separation 20Hz to 20,000Hz	30dB Minimum
Power Requirements	120V AC
Power Consumption-at Rated Output, Both Channels Operating	20 Watts
Dimensions	
Panel Width	17-3/8 inches
Panel Height	5-3/8 inches
Depth	14-3/8 inches
Weight	
Unit alone	24.2 lbs
Packed for Shipment	35 lbs

* These specifications and exterior designs may be changed for improvement without advance notice.

www.hifiengine.com

marantz

MARANTZ CO., INC. · P.O. BOX 99 · SUN VALLEY, CALIFORNIA · 91352

A WHOLLY-OWNED SUBSIDIARY OF SUPERSCOPE INC., SUN VALLEY, CALIFORNIA 91352

SQ is a trademark of CBS INC.
Noise reduction circuit under license from Dolby Laboratories, Inc.
"DOLBY" and the Double-D symbol are trademarks of Dolby Laboratories, Inc.

PRINTED IN JAPAN

2896855010

www.hifiengine.com