SERVICE MANUAL

EQ351

4822 725 50847

marantz®

model EQ351

Stereo Graphic Equalizer

www.hifiengine.com

MODEL EQ351 STEREO GRAPHIC EQUALIZER

How to use this service manual

- The "Common parts" which Marantz Japan, Inc. has established are eliminated from this service manual.
- These "Common parts" are applied to all models in the service manuals arranged and issued by MJI.
- To indicate clearly the common parts in the schematic diagram, a line is drawn above or under the Ref. Desig. No. of applicable parts.
- "Common parts" can be supplied from the Marantz service center as ever.
  In case of ordering, please establish the parts number of 12 N/C'S following the procedure mentioned in this service manual "How to establish the parts number for common parts".

1) Please correctly write the parts number of 12 N/C'S following the rule.

TABLE OF CONTENTS

Section	Page
1. P.W. BOARD	2
2. ADJUSTMENT METHOD	3
3. PARTS LOCATION (Pattern Side)	4
4. EXPLODED VIEW AND PARTS LIST	6
5. ELECTRICAL PARTS LIST	7
SCHEMATIC DIAGRAM	

1. P. W. BOARDS

As can be seen from the circuit diagram, the chassis of your Cassette Deck consists of the following units. Each unit mounted on a printed circuit board is described within the square enclosed by a bold dotted line on the circuit diagram.

1. Main . . . . . mounted on P.W. Board
2. EQ Control . . . . . mounted on P.W. Board
3. EQ Level . . . . . mounted on P.W. Board
4. Peak Indicator . . . . . mounted on P.W. Board
5. Mode Switch . . . . . mounted on P.W. Board
6. Mode Indicator . . . . . mounted on P.W. Board

www.hifiengine.com

2. ADJUSTMENT METHOD

Main P.W. Board

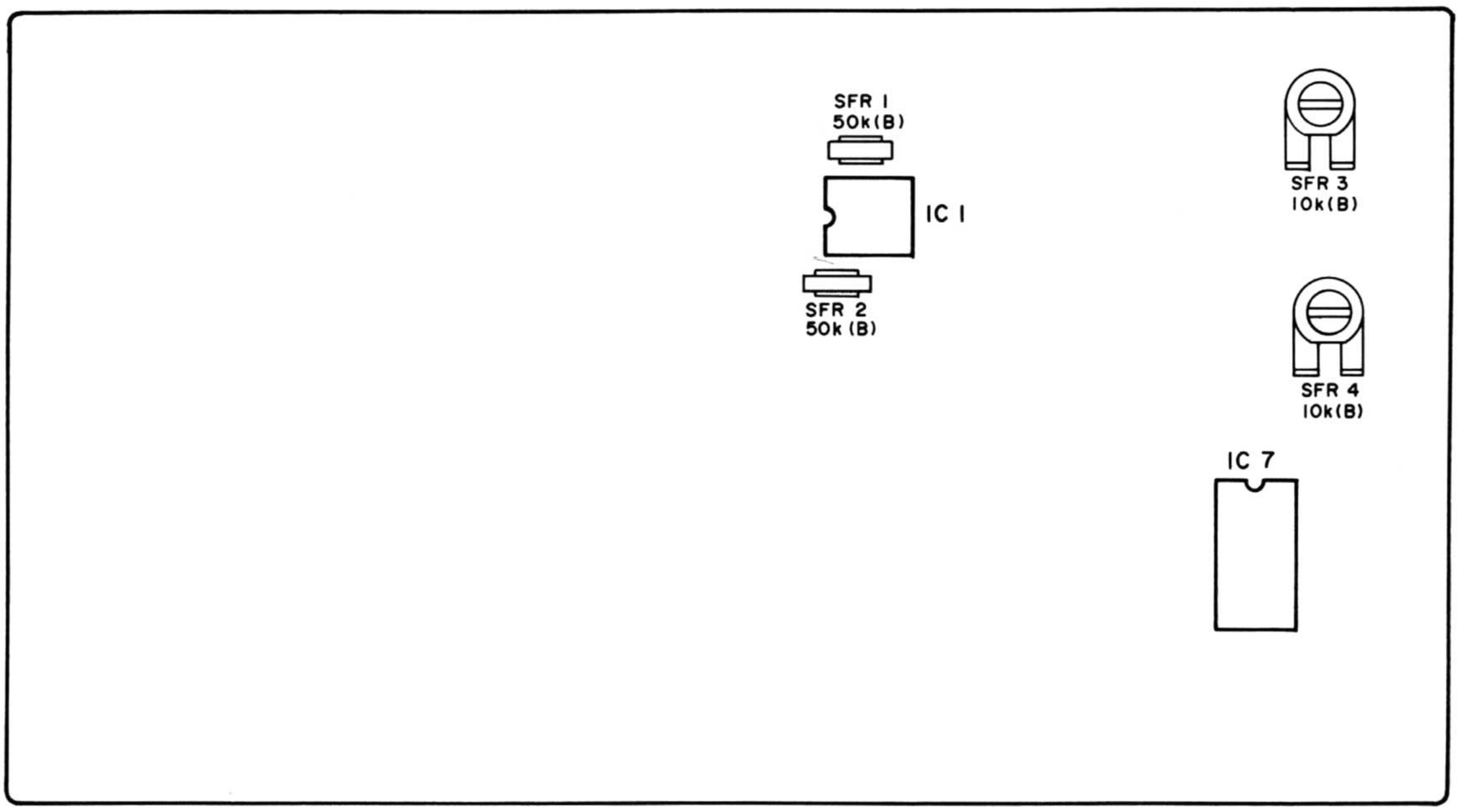

1. SFR1/SFR2 ADJUSTMENT METHOD.

Test condition:
A. EQ VR at center position
B. EQ level at center position
C. Input: 1 kHz, 1V from line in
D. Output: 1 kHz, 1V from line out
E. Tape monitor SW off, EQ REC SW off, EQ REC SW off
Adjust SFR1/SFR2 to make the output level at 1V during EQ EW in and out.

2. SFR3/SFR4 ADJUSTMENT METHOD.

Test condition:
A. EQ tone VR at center position
B. Level VR at max position
C. Input: 1 kHz from line in
D. Output: 1 kHz from line out
E. EQ SW: In position, monitor SW off, EQ REC SW off.
Apply 1 kHz signal to L channel, gradually increase the input level until the output wave from on scope become a little bit clip than adjust SFR3 to make the peak LED on front panel "ON", at this time the output level is about 4.5V, repeat the same procedure for R channel and adjust SFR4 to make peak LED "ON" at same output level.

www.hifiengine.com

3. PARTS LOCATION (Pattern Side)

Main P.W. Board

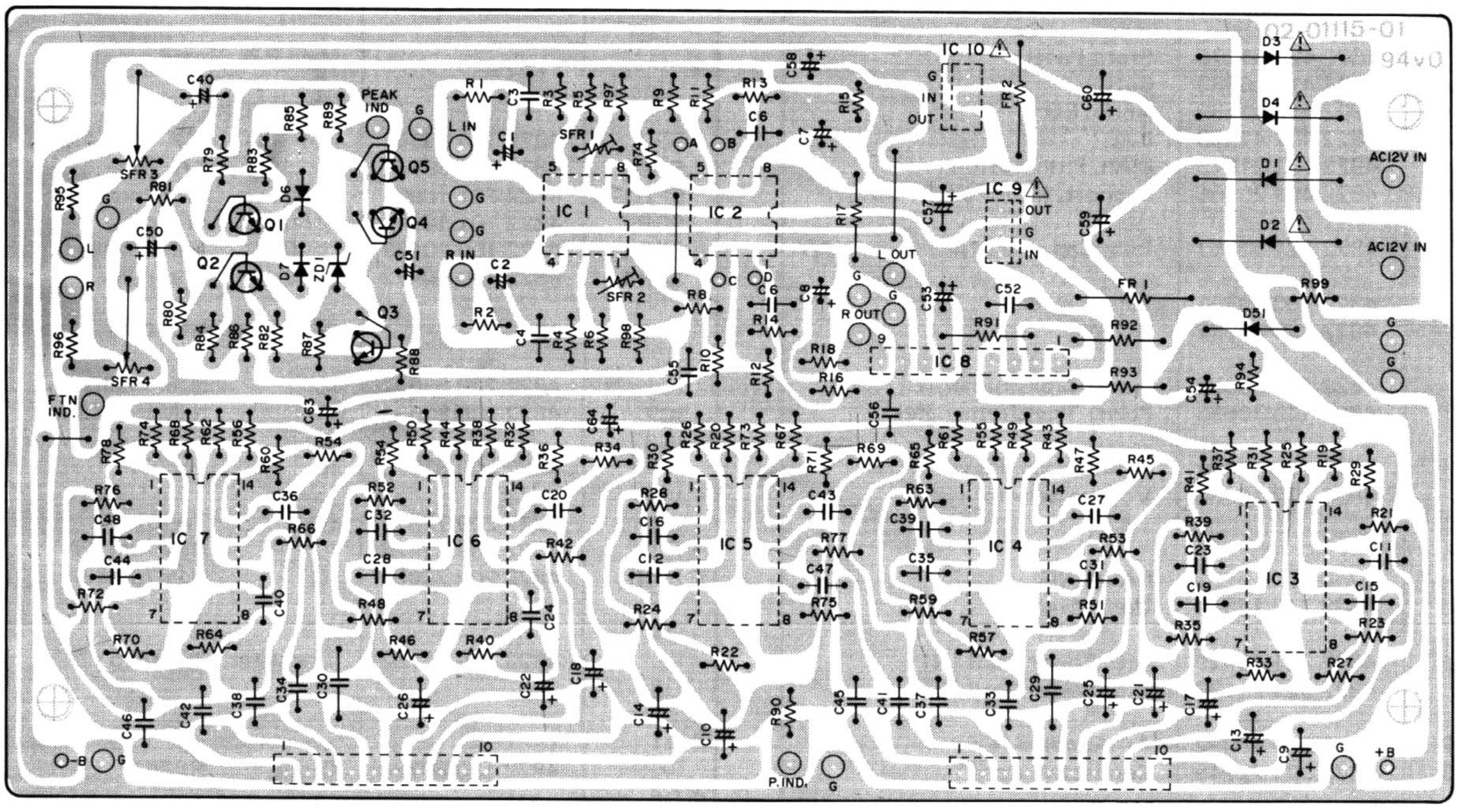

Mode Switch P.W. Board

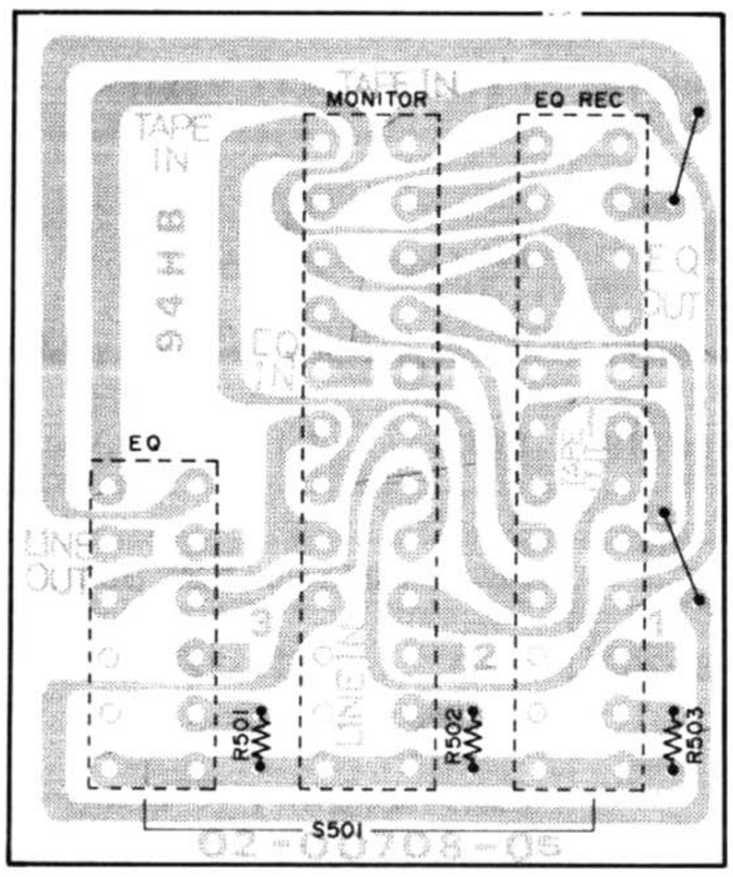

EQ Level P.W. Board

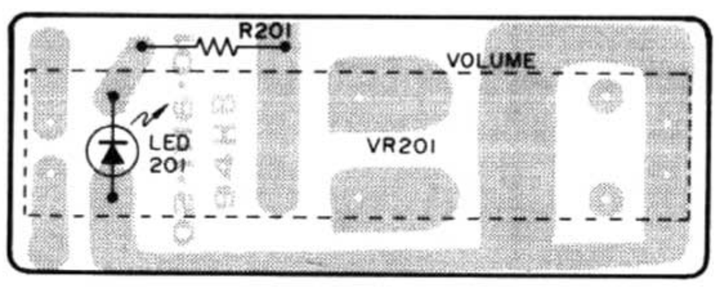

Mode Indicator P.W. Board

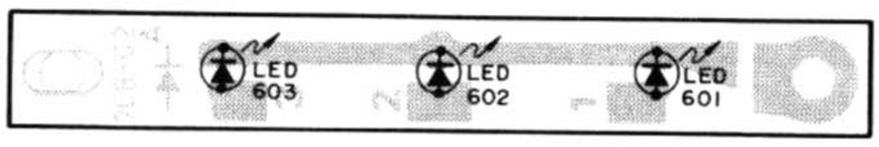

www.hifiengine.com

EQ Control P.W. Board (L)

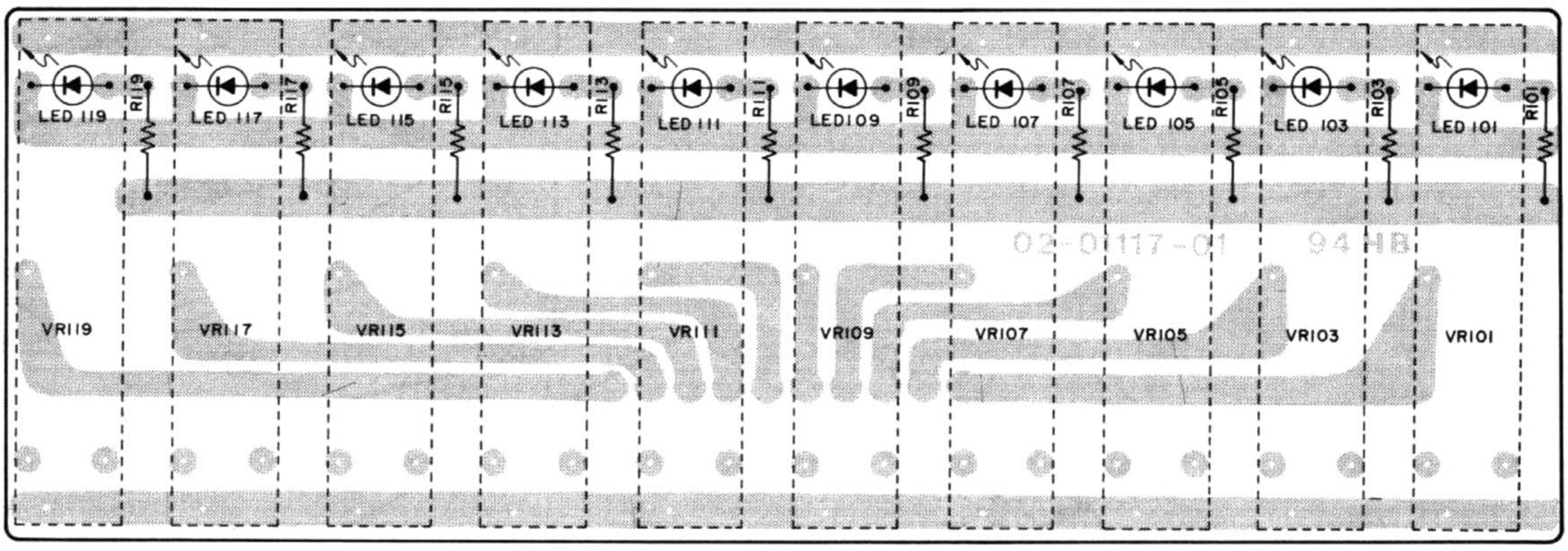

EQ Control P.W. Board (R)

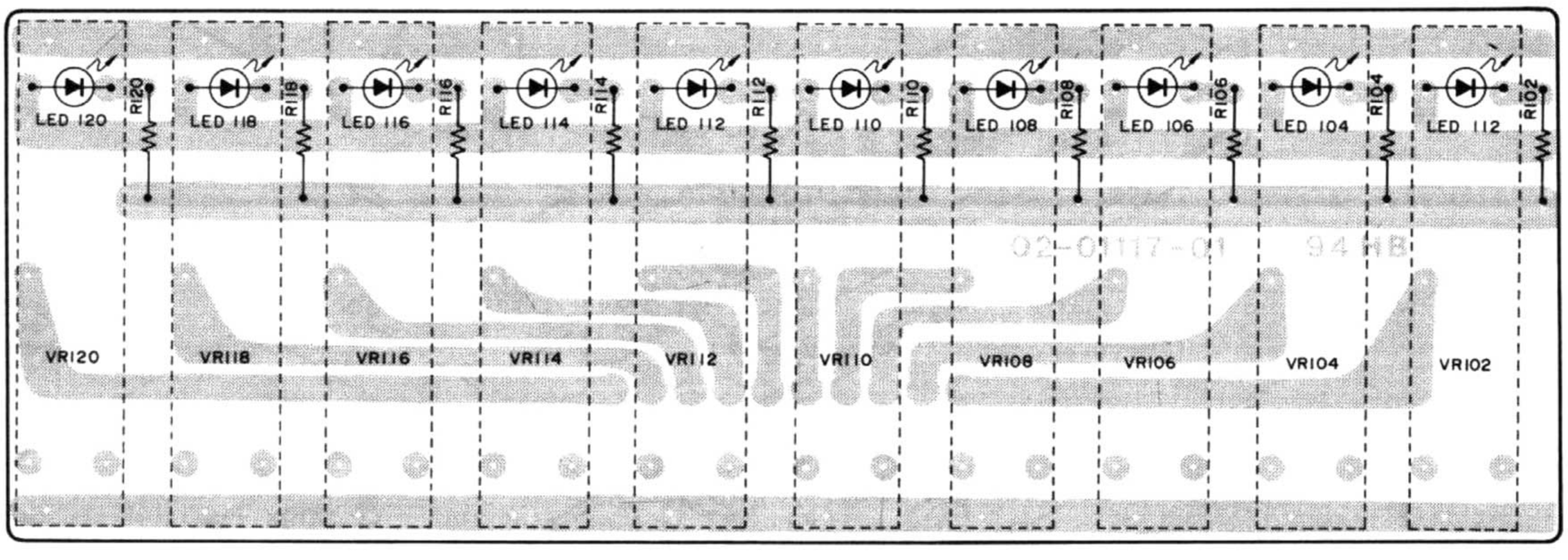

Power Indicator P.W. Board

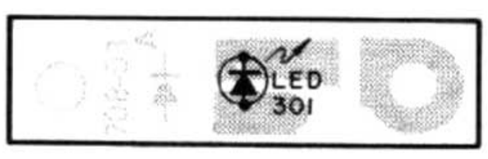

Peak Indicator P.W. Board

www.hifiengine.com

4. EXPLODED VIEW AND PARTS LIST

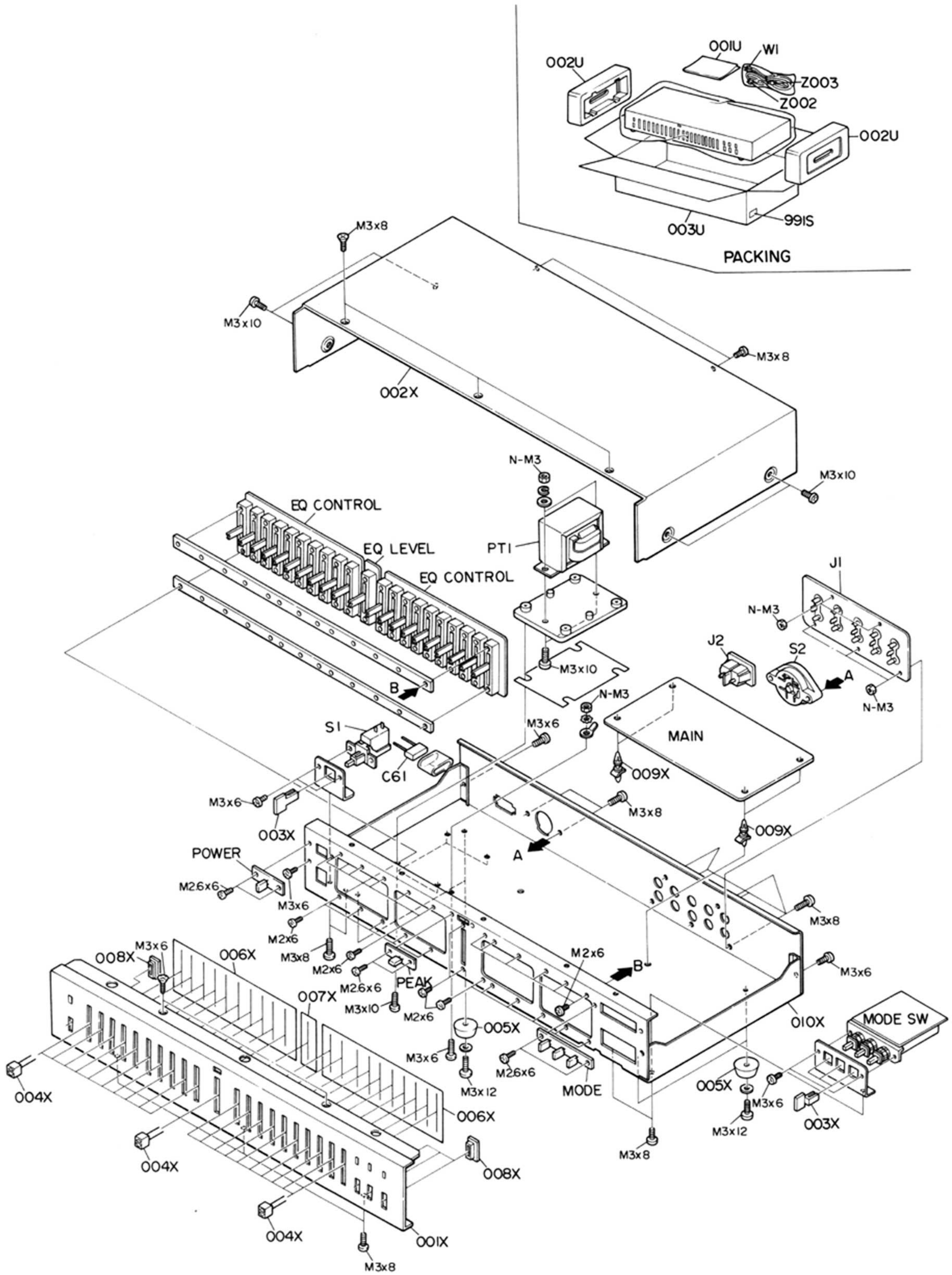

www.hifiengine.com

5. ELECTRICAL PARTS LIST

REF. DESIG.	PART NO.	DESCRIPTION
001X	4822 426 51275	Front Panel
003X	4822 410 26383	Button
004X	4822 413 41432	Knob, EQ
005X	4822 462 41229	Leg
008X	4822 532 21313	Bush, Push Button
009X	4822 404 20966	Support, Main P.W. Board
⚠C61	4822 121 51257	Film Cap. 0.01μF 125V
J1	4822 290 80801	Terminal, 8P
⚠J2	4822 265 20222	AC Inlet
⚠PT1	4822 146 30682	Power Transformer [E]
	4822 146 30683	Power Transformer [N]
⚠S1	4822 276 12392	Push Switch, Power
⚠S2	4822 272 10236	Voltage Selector
		PACKING
001U	4822 736 13844	User's Manual
⚠W1	4822 321 10429	A.C. Power Cord [N]
	4822 321 21123	A.C. Power Cord [E]
Z002	4822 265 10092	AC Adaptor [E]
Z003	4822 321 22745	Connective Cord

REF. DESIG.	PART NO.	DESCRIPTION
		Main P.W. Board
		RESISTORS
FR1	4822 116 80561	10Ω ½W, Fuse
FR2	4822 116 80561	10Ω ½W, Fuse
SFR1	4822 101 10904	50KΩ Trimming
SFR2	4822 101 10904	50KΩ Trimming
SFR3	4822 100 10472	10KΩ Trimming
SFR4	4822 100 10472	10KΩ Trimming
		SEMICONDUCTORS
IC1	4822 209 83631	IC NJM4558DD
IC2	4822 209 83631	IC NJM4558DD
IC3 ~ IC7	4822 209 83975	IC LM324N
IC8	4822 209 72811	IC TA7324P
⚠IC9	4822 209 82828	IC NJM78M12A
⚠IC10	4822 209 70086	IC NJM79M12A
Q1 ~ Q5	4822 130 43792	Transistor 2SC1815Y
⚠D1 ~ ⚠D4	4822 130 80724	Diode RL201
D5	4822 130 31438	Diode IN4001
D6	4822 130 30621	Diode IN4148
D7	4822 130 30621	Diode IN4148
ZD1	4822 130 32653	Zener MA1062
		EQ Control P.W. Board (L)(R)
VR101 ~ VR120	4822 105 10978	Variable Resistor 20KΩ(W)
LED101 ~ LED120	4822 130 80718	LED LTL-23218AB
		EQ Level P.W. Board
VR201	4822 105 10977	Variable Resistor 100KΩ(A)x2
LED201	4822 130 80719	LED LTL-23238AB
		Power Indicator P.W. Board
LED301	4822 130 80358	LED LTL-3231A
		Peak Indicator P.W. Board
LED401	4822 130 80359	LED LTL-3211A
		Mode Switch P.W. Board
S501	4822 276 12391	Push Switch, Mode
		Mode Indicator P.W. Board
LED601	4822 130 80358	LED LTL-3231A
LED602	4822 130 80358	LED LTL-3231A
LED603	4822 130 80358	LED LTL-3231A

www.hifiengine.com

SCHEMATIC DIAGRAM

MODEL EQ351

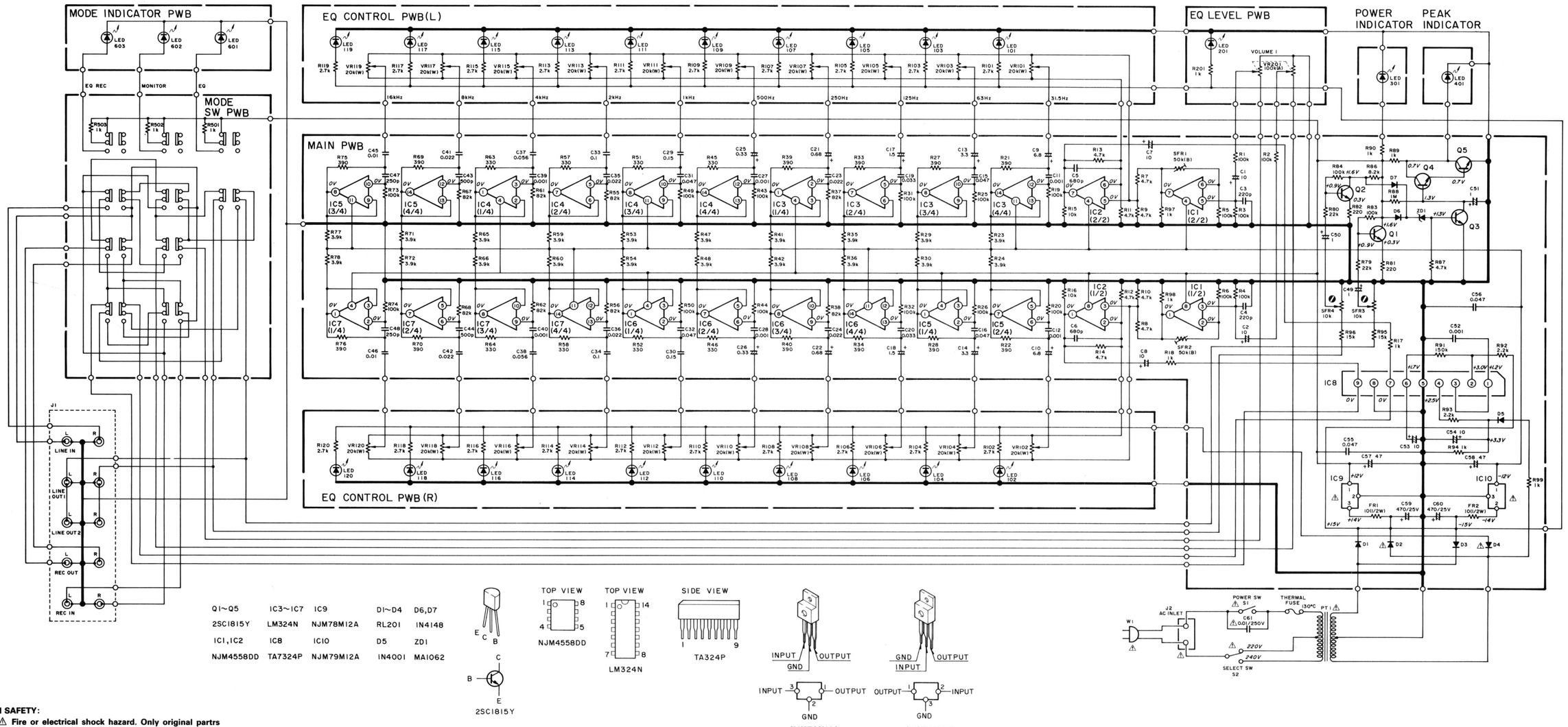

Q1~Q5	IC3~IC7	IC9	D1~D4	D6,D7
2SC1815Y	LM324N	NJM78M12A	RL201	IN4148
IC1,IC2	IC8	IC10	D5	ZD1
NJM4558DD	TA7324P	NJM79M12A	IN4001	MA1062

NOTE ON SAFETY:
Symbol ⚠ Fire or electrical shock hazard. Only original partrs should be used to replace any part marked with symbol ⚠. Any other component substitution (other than original type), may increase risk of fire or electrical shock hazard.

Components and wiring are subject to change for modification without notice.

"SERVICE INFORMATION IS FOR USE BY QUALIFIED RERSONNEL ONLY – ANY MISADJUSTMENT OR MISALIGNMENT MAY BE TREATED AS A NON-WARRANTY REPAIR BY ANY MARANTZ SERVICE CENTER–"

MZ 1817

MARANTZ DESIGN AND SERVICE

Using superior design and selected high grade components, MARANTZ company has created the ultimate in stereo sound.
Only **original MARANTZ parts** can insure that your MARANTZ product will continue to perform to the specifications for which it is famous.

Parts for your MARANTZ equipment are generally available to our National Marantz Subsidiary or Agent.

ORDERING PARTS:

Parts can be ordered either by mail or by telex. In both cases, correct part number has to be specified.

The following information must be supplied to eliminate delays in processing your order:

1. Complete address
2. Complete part numbers and quanties required
3. Description of parts
4. Model number for which part is required
5. Way of shipment
6. Signature: any order form or telex must be signed otherwise such part order will be considered as null and void.

TECHNICAL ASSISTANCE

Should you require any other technical support, do not hesitate to contact the Technical Department of
MARANTZ INTERNATIONAL
Quality & Service Dept.
80, Rue des Deux Gares,
B-1070 Brussels
Belgium
Phone: 02/525.70.22 or 525.70.23
Telefax: 02/525.6160
Telex: 23550 OR
61511 (PHEMB) routing: BELDMZT

PARTS ORDERING

Parts may be ordered at the following addresses:

AUSTRIA
HORNYPHON
Vertriebsgesellschaft GmbH
Wienerbergstrasse 1
A 1101 Wien
Austria
Telex: 132.332

AUSTRALIA
MARANTZ AUSTRALIA
PTY., Ltd.
19 Chard Road
Brookvale, NSW 2100
Australia
Telex: 24121

BELGIUM
SVD DIVISION MARANTZ
Industrialaan 1
1720 Groot-Bijgaarden
Belgium
Telex: 24466

CHILE
MARANTZ
DIVISION OF PHILIPS S.A.
AV. Santa Maria, 0760
Casilla 2687
Santiago
Telex: 240.239

DENMARK
MARANTZ
DIVISION OF PHILIPS
SERVICE A/S
Prags Boulevard 80
Postbox 1919
DK-2300 København S
Denmark
Telex: 31201

FINLAND
MARANTZ
DIVISION OF OY PHILIPS Ab
Kaivokatu 8
00100 Helsinki
Finland
Telex: 124811

FRANCE
MARANTZ FRANCE
4 Rue Bernard Palissy
92600 Asnières
France
Telex: 611651

GERMANY
MARANTZ GERMANY GmbH
Max-Planck-Strasse 22
6072 Dreieich 1
Germany
Telex: 529821

THE NETHERLANDS
Elpro b.v.
De Limiet 3
4131 NR Vianen
The Netherlands
Telex: 47679

NORWAY
MARANTZ
DIVISION OF PHILIPS A/S
Sandstuveien 40
Oslo 6
Norway
Telex: 72640

GREAT BRITAIN
MARANTZ AUDIO U.K. Ltd
Unit 15/16
Saxon Way Industrial Estate
Moor Lane
Harmondsworth UB7 OLW
Great Britain
Telex: 935196

GREECE
SHERTON ELECTRONICS S.A.
P.O.Box 21025
Hippocratus Street 188
Athens 11471
Greece
Telex: 216.795

JAPAN
MARANTZ JAPAN, Inc.
35-1, 7-chome, Sagamiono
Sagamihara-shi, Kanagawa
Japan

KUWAIT
AL ALAMIAH ELECTRONICS
Ussama Building
Fahd al Saleem Street
P.O.Box 23781
Safat-Kuwait
Telex: 22694

ITALY
MARANTZ ITALIANA S.P.A.
Via Chiese, 74
20126 Milano
Italy

SAUDI ARABIA
AL ALAMIAH ELECTRONICS
P.O.Box 5954
University Street
Riyadh 11432
Saudi Arabia
Telex: 201530

SOUTH AFRICA
MARANTZ
DIVISION OF PHILIPS S.A.
Rainer House
Ove Street, 10
Doornfontein
Johannesburg
Telex: 483.456

SPAIN
PHONO S.A.
Ignacio Iglesias 10
Badalona (Barcelona)
Spain
Telex: 59355

SWEDEN
MARANTZ
DIVISION OF PHILIPS
Försäljning AB
Tegeluddsvägen 1
S-115 84 Stockholm
Sweden
Telex: 14060

SWITZERLAND
DYNAVOX ELECTRONICS
Route de Villars 105
1701 Fribourg
Switzerland
Telex: 942377

TURKEY
DOGRUOL Ltd.
I.M.C.
6 Blok N°6310
Unkapani
Istanbul
Turkey
Telex: 22085

MALTA
CACHIA & GALEA
Republic Street, 68D
Valetta
Telex: 1682

U.S.A.
MARANTZ COMPANY, Inc.
National Service Department
P.O.Box 577
Chatsworth, CA 91311
U.S.A.

All of the above locations are fully equipped to take care of your total service needs. Because various countries have differing configuration requirements, it is necessary that you contact the service facility in your particular country. In the event that there is no service location listed for your country, please, contact the nearest facility for the necessary assistance.

In case of difficulties, do not hesitate to contact the Technical Department at abovementioned address.

www.hifiengine.com

marantz®

MARANTZ is a registered trademark.

MZ 1818

www.hifiengine.com