pc-2032b.sch-1 - Thu Dec 31 11:01:41 1998

Z	SYM	DA	REVISION RECORD	AUTHORITY	DRAW	CHECK
			RELEASED			

NOTES: UNLESS SPECIFIED OTHERWISE
1. ALL RESISTORS IN OHMS
2. ALL CAPACITORS IN MICROFARADS
3. COMMON PARTS DESIGNATORS 1 TO 99
4. LEFT CHANNEL DESIGNATORS 101 TO 199
5. RIGHT CHANNEL 201 TO 299

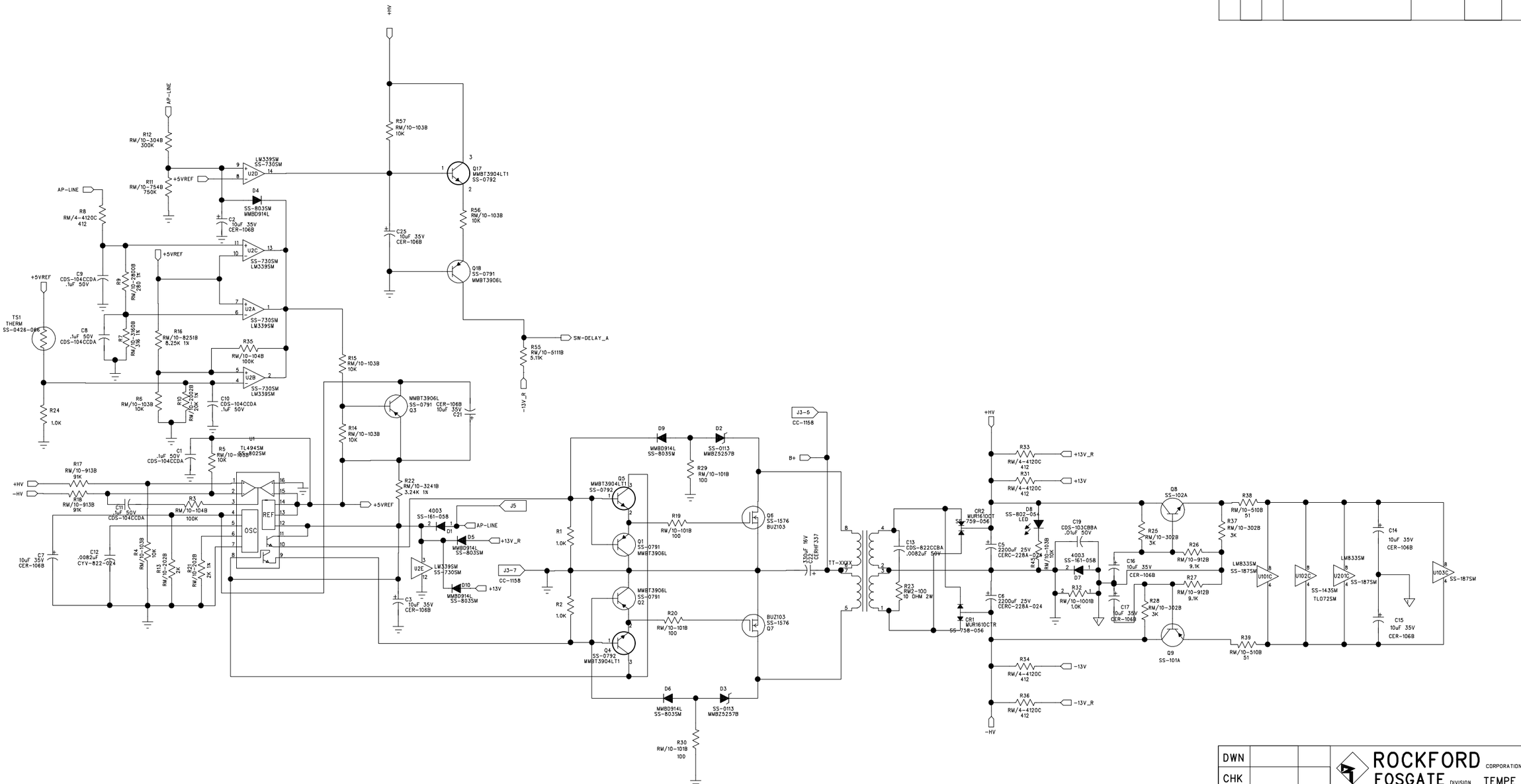

DWN			ROCKFORD FOSGATE CORPORATION DIVISION TEMPE AZ	
CHK			TITLE	
ENGR	C. Castrejon	03/03/98	PUNCH 100.2 POWER SUPPLY	
APVD	C. Castrejon	03/03/98		
APVD			SIZE / SCALE / SHEET 1 OF 3	
MATL/FS			FILE NAME / PART NO. / REV B	

REV | FILE NAME | PART NO.

Z	SYM	DA	REVISION RECORD	AUTHORITY	DRAW	CHECK
			RELEASED			

NOTES: UNLESS SPECIFIED OTHERWISE
1. ALL RESISTORS IN OHMS
2. ALL CAPACITORS IN MICROFARADS
3. COMMON PARTS DESIGNATORS 1 TO 99
4. LEFT CHANNEL DESIGNATORS 101 TO 199
5. RIGHT CHANNEL 201 TO 299

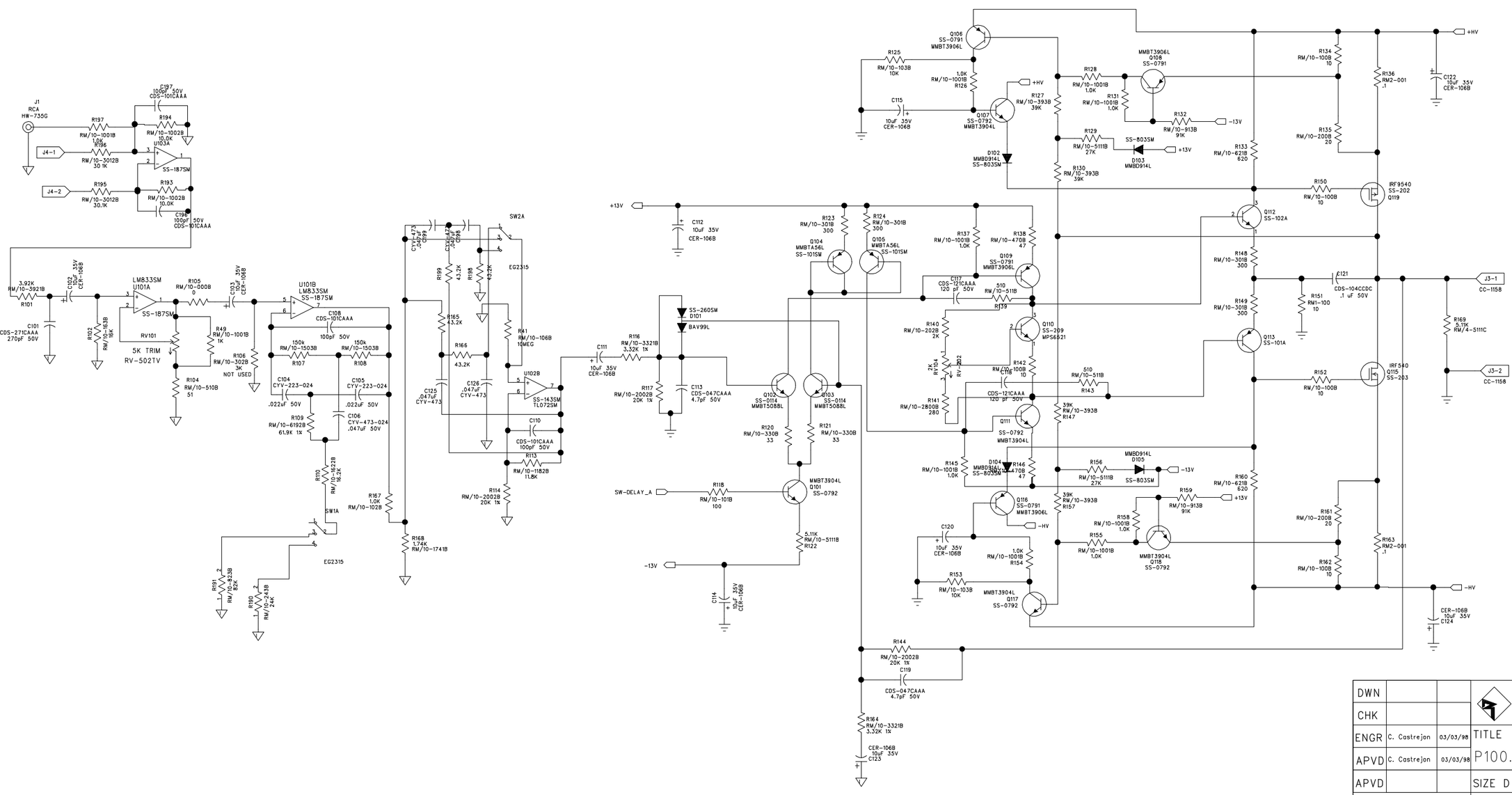

DWN			ROCKFORD FOSGATE CORPORATION DIVISION TEMPE AZ
CHK			
ENGR	C. Castrejon	03/03/98	TITLE
APVD	C. Castrejon	03/03/98	P100.2 LEFT CHANNEL
APVD			SIZE D / SHEET 2 OF 3
MATL/FS			FILE NAME / PART NO. / REV B

REV A | FILE NAME | PART NO.

pc-2032b.sch-3 - Thu Dec 31 11:02:14 1998

Z	SYM	DA	REVISION RECORD	AUTHORITY	DRAW	CHECK
			RELEASED			

NOTES: UNLESS SPECIFIED OTHERWISE
1. ALL RESISTORS IN OHMS
2. ALL CAPACITORS IN MICROFARADS
3. COMMON PARTS DESIGNATORS 1 TO 99
4. LEFT CHANNEL DESIGNATORS 101 TO 199
5. RIGHT CHANNEL 201 TO 299

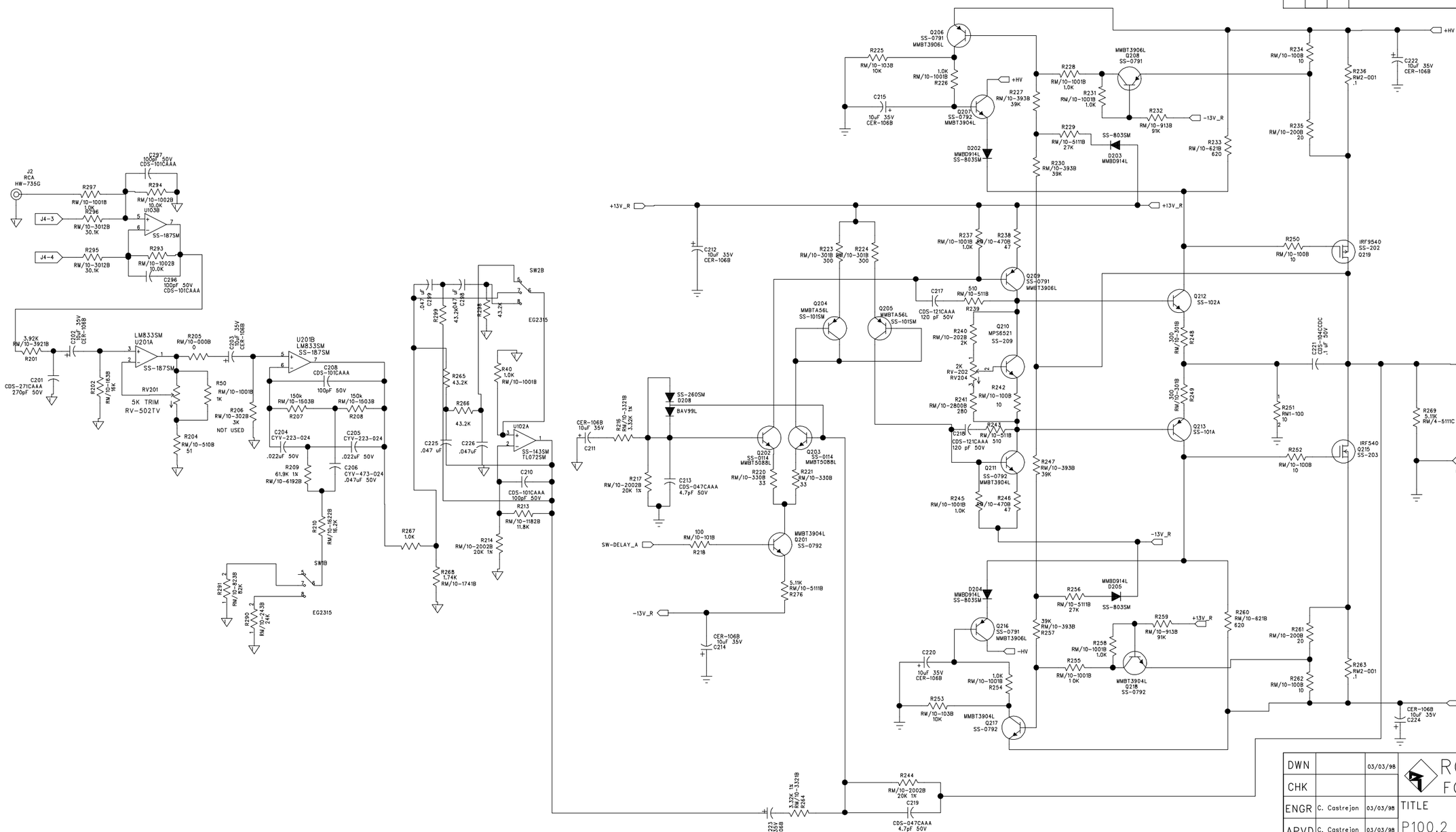

DWN		03/03/98	ROCKFORD FOSGATE CORPORATION DIVISION TEMPE AZ
CHK			
ENGR	C. Castrejon	03/03/98	TITLE
APVD	C. Castrejon	03/03/98	P100.2 RIGHT CHANNEL
APVD			SIZE D / SHEET 3 OF 3
MATL/FS			FILE NAME / PART NO. / REV B

REV A | FILE NAME | PART NO.