SUBSTITUTE PART # SS-0274 (HARRIS IRF540)
FOR REF DES Q142 143 144 146
242 243 244 246
PER ECO 3698

PART # RW/10-101B (100 OHM 5%) HAS BEEN
REPLACED. REF DES R293 294
NEW PART # RW/10-100B (10 OHM 5%)
PER ECO 3694 & 3704

CDS-104CCDC (.1UF 50V) HAS BEEN
REMOVED. REF DES C118 218
PER ECO 3800

CORD	REV	REVISION RECORD	AUTHORITY	DATE
	A	PRODUCTION RELEASE ECO 3636	W.C.	12-94
	B	ECO 3694	H M	3-95
	C	ECO 3698	H.M.	3-95
	D	ECO 3704	H.M.	3-95
	E	ECO 3756	H.M.	3-95
	F	ECO 3800	H.M.	5-95
	G	ECO 3807	H.M.	5-95
	H	ECO 3812	H.M.	5-95
	I	ECO 3826	H.M.	5-95
	J	ECO 3922 SS-236-056 (IRFZ11) REF DES Q6 Q7 Q10 Q11 HAS BEEN REPLACED BY SS-0967-056 (IRF242)	H M	8-95

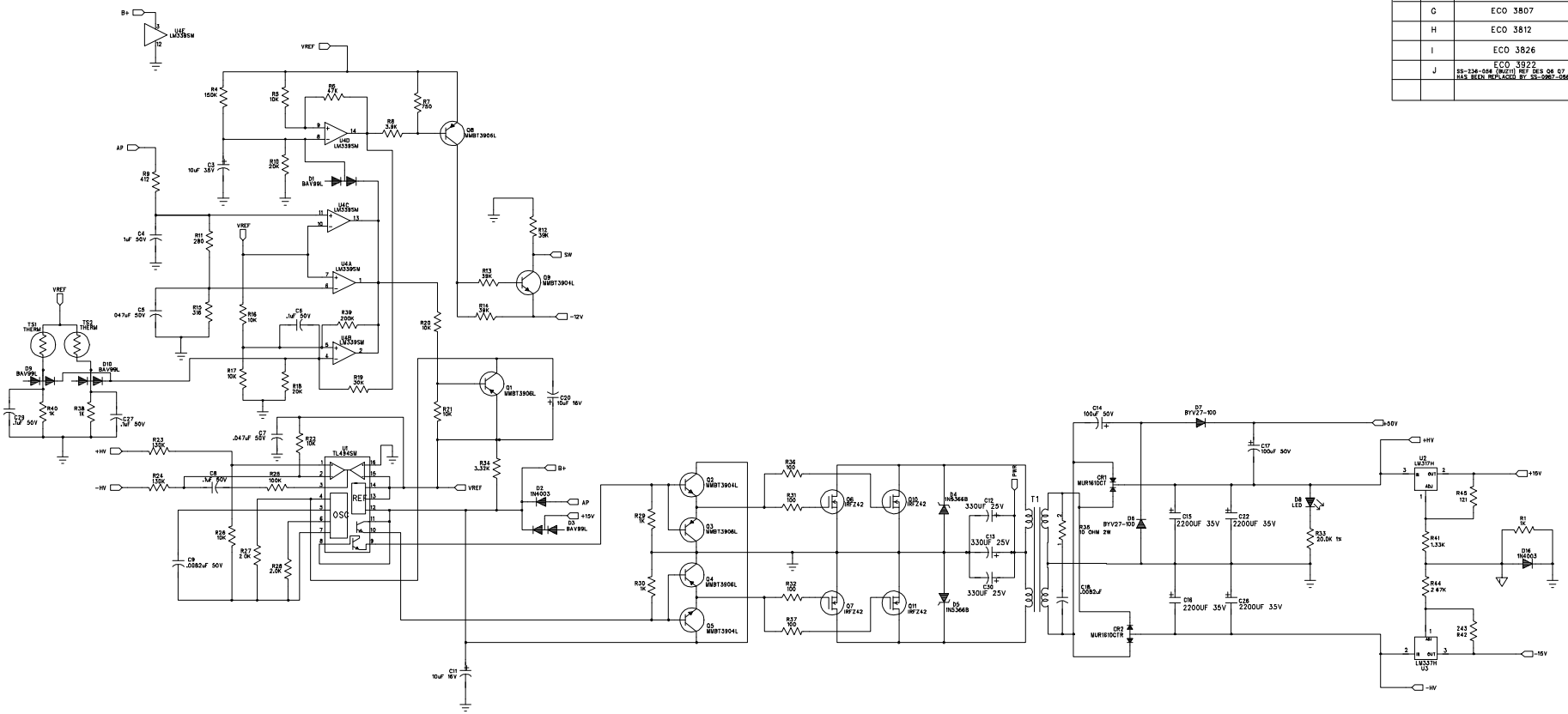

DWN	C.C.	11-94	ROCKFORD FOSGATE DIVISION CORPORATION TEMPE AZ	
CHK	C.C.	11-94		
ENGR	C.C.	11-94	TITLE P100 TOPAZ POWER SUPPLY	
APVD	C.C.	11-94		
APVD			SIZE B	SHEET 1 OF 3
MATL/FS			FILE NAME SCH0765E	PART NO. SCH-0765E REV J

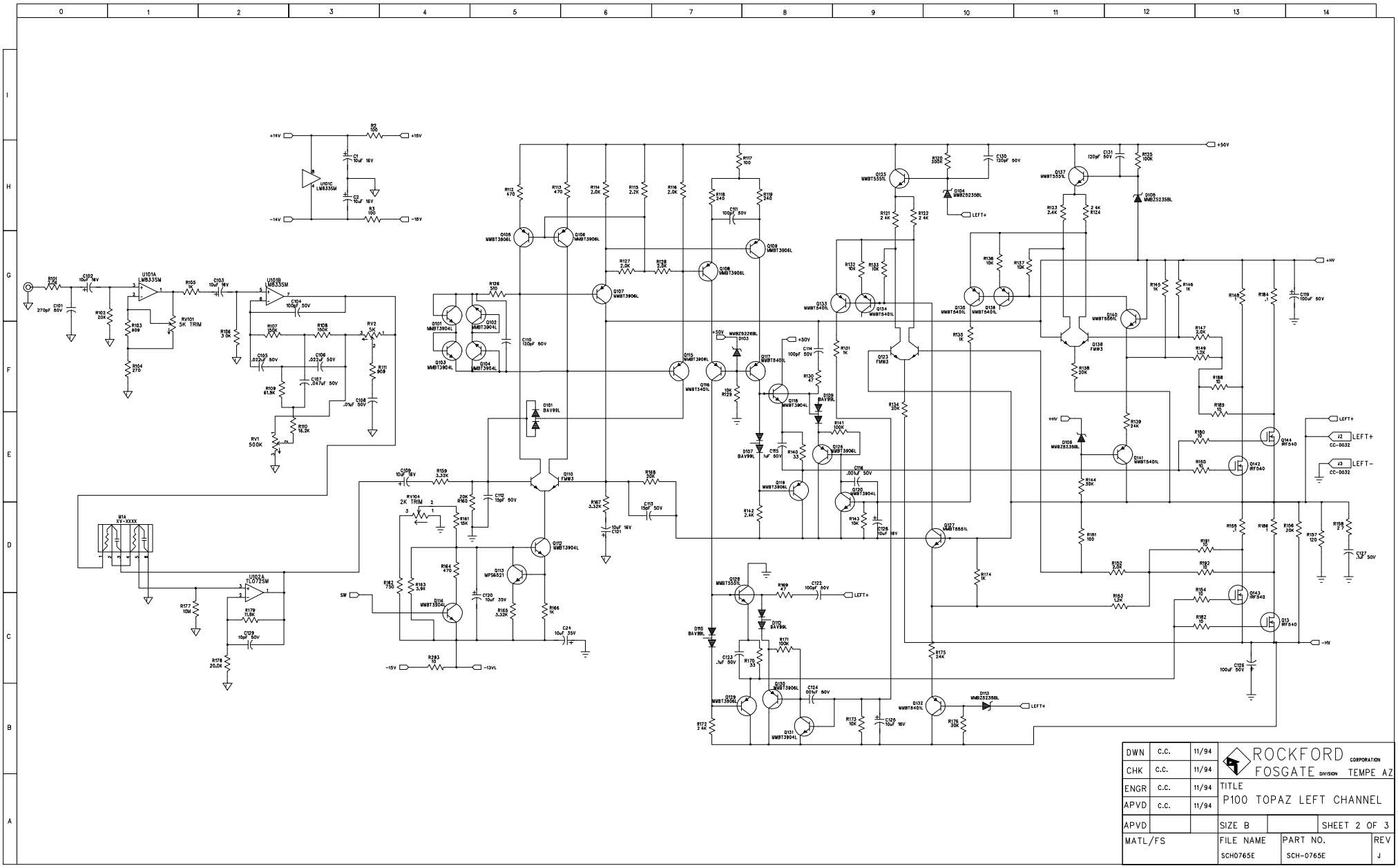

DWN	C.C.	11/94	ROCKFORD FOSGATE CORPORATION DIVISION TEMPE AZ	
CHK	C.C.	11/94		
ENGR	C.C.	11/94	TITLE P100 TOPAZ LEFT CHANNEL	
APVD	C.C.	11/94		
APVD			SIZE B	SHEET 2 OF 3
MATL/FS			FILE NAME SCH0765E	PART NO. SCH-0765E REV J

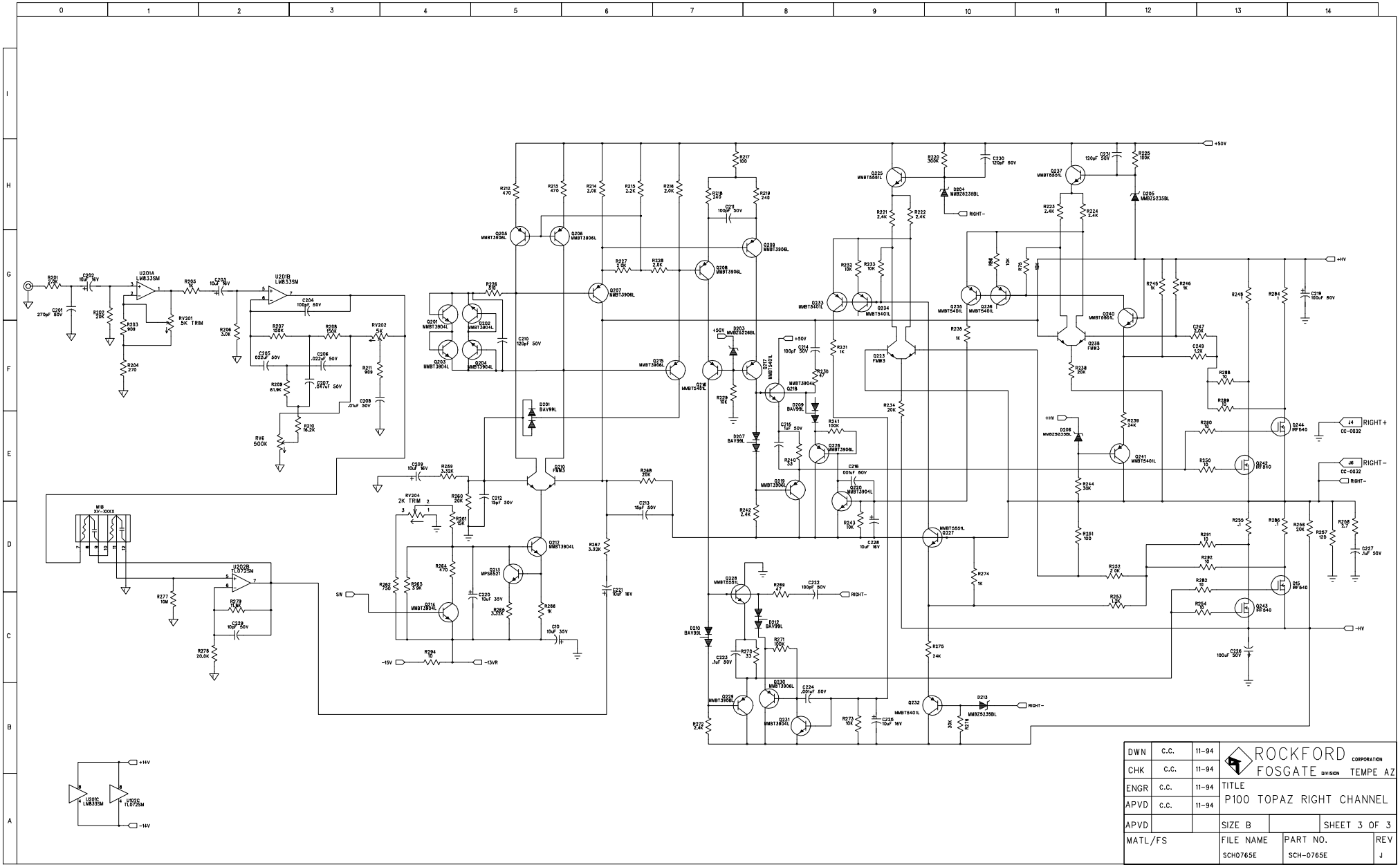

DWN	C.C.	11-94	ROCKFORD FOSGATE CORPORATION DIVISION TEMPE AZ
CHK	C.C.	11-94	
ENGR	C.C.	11-94	TITLE: P100 TOPAZ RIGHT CHANNEL
APVD	C.C.	11-94	
APVD			SIZE B — SHEET 3 OF 3
MATL/FS			FILE NAME: SCH0765E — PART NO.: SCH-0765E — REV: J