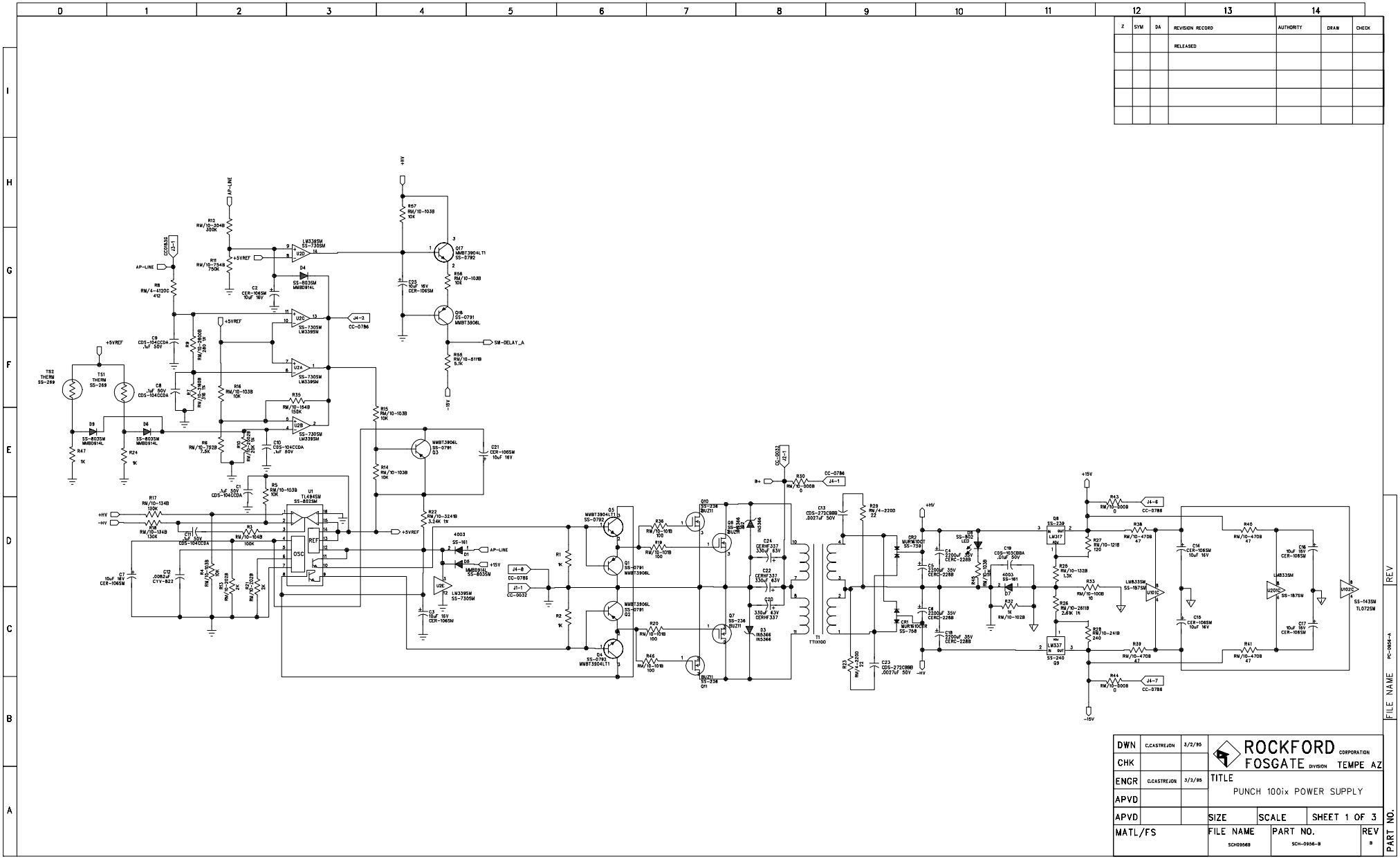

| Z | SYM | DA | REVISION RECORD | AUTHORITY | DRAW | CHECK |
|---|---|---|---|---|---|---|
| | | | RELEASED | | | |

| | | | | | |
|---|---|---|---|---|---|
| DWN | C.CASTREJON | 3/2/95 | ROCKFORD FOSGATE CORPORATION DIVISION TEMPE AZ | | |
| CHK | | | | | |
| ENGR | C.CASTREJON | 3/2/95 | TITLE PUNCH 100ix POWER SUPPLY | | |
| APVD | | | | | |
| APVD | | | SIZE | SCALE | SHEET 1 OF 3 |
| MATL/FS | | | FILE NAME SCH0956B | PART NO. SCH-0956-B | REV B |

FILE NAME PC-0954-A

PART NO.

REV

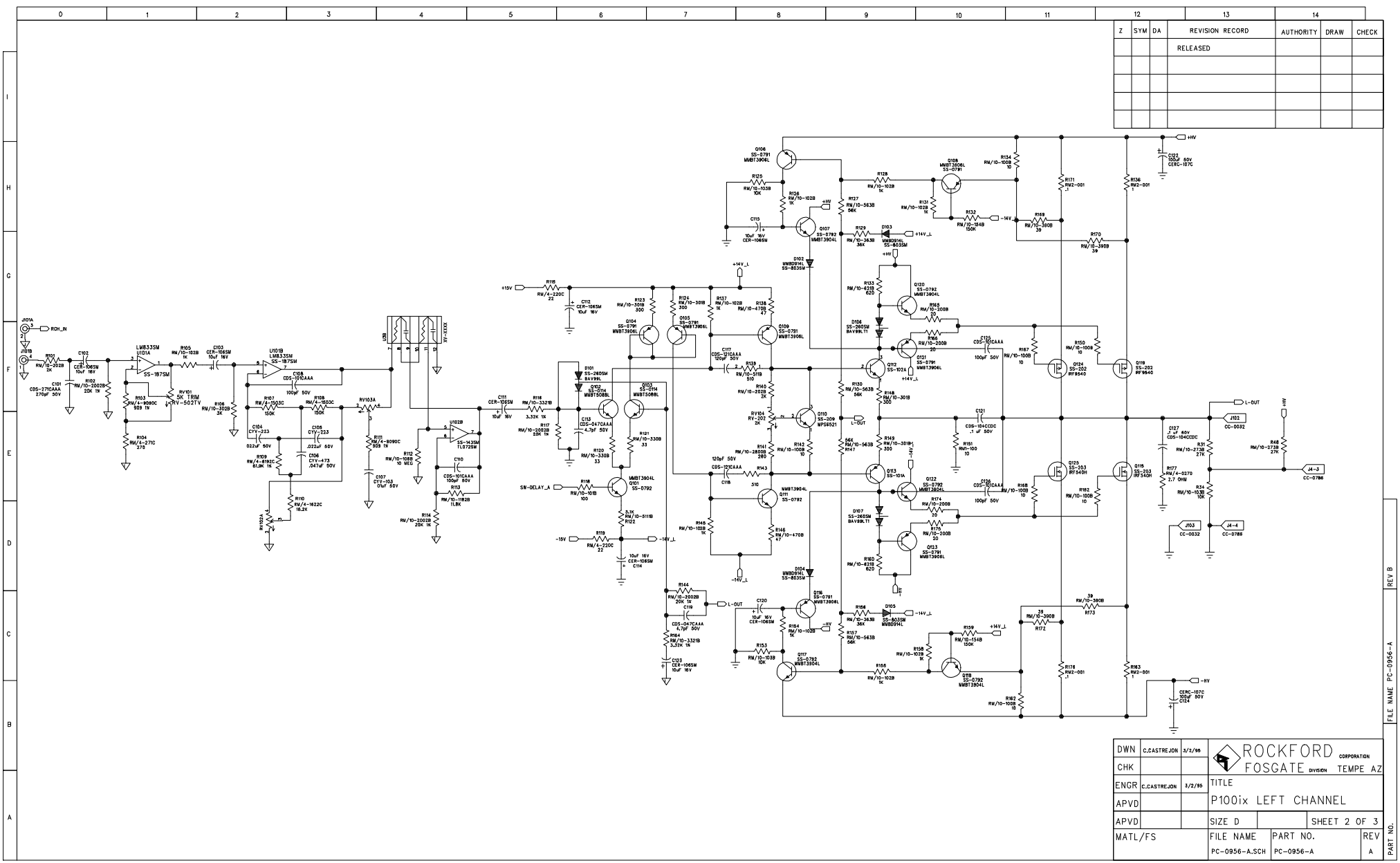

| Z | SYM | DA | REVISION RECORD | AUTHORITY | DRAW | CHECK |
|---|---|---|---|---|---|---|
| | | | RELEASED | | | |

| | | | | |
|---|---|---|---|---|
| DWN | C.CASTREJON | 3/2/95 | ROCKFORD FOSGATE CORPORATION DIVISION TEMPE AZ | |
| CHK | | | | |
| ENGR | C.CASTREJON | 3/2/95 | TITLE | |
| APVD | | | P100ix LEFT CHANNEL | |
| APVD | | | SIZE D | SHEET 2 OF 3 |
| MATL/FS | | | FILE NAME: PC-0956-A.SCH | PART NO.: PC-0956-A, REV: A |

FILE NAME PC-0956-A

REV B

PART NO.

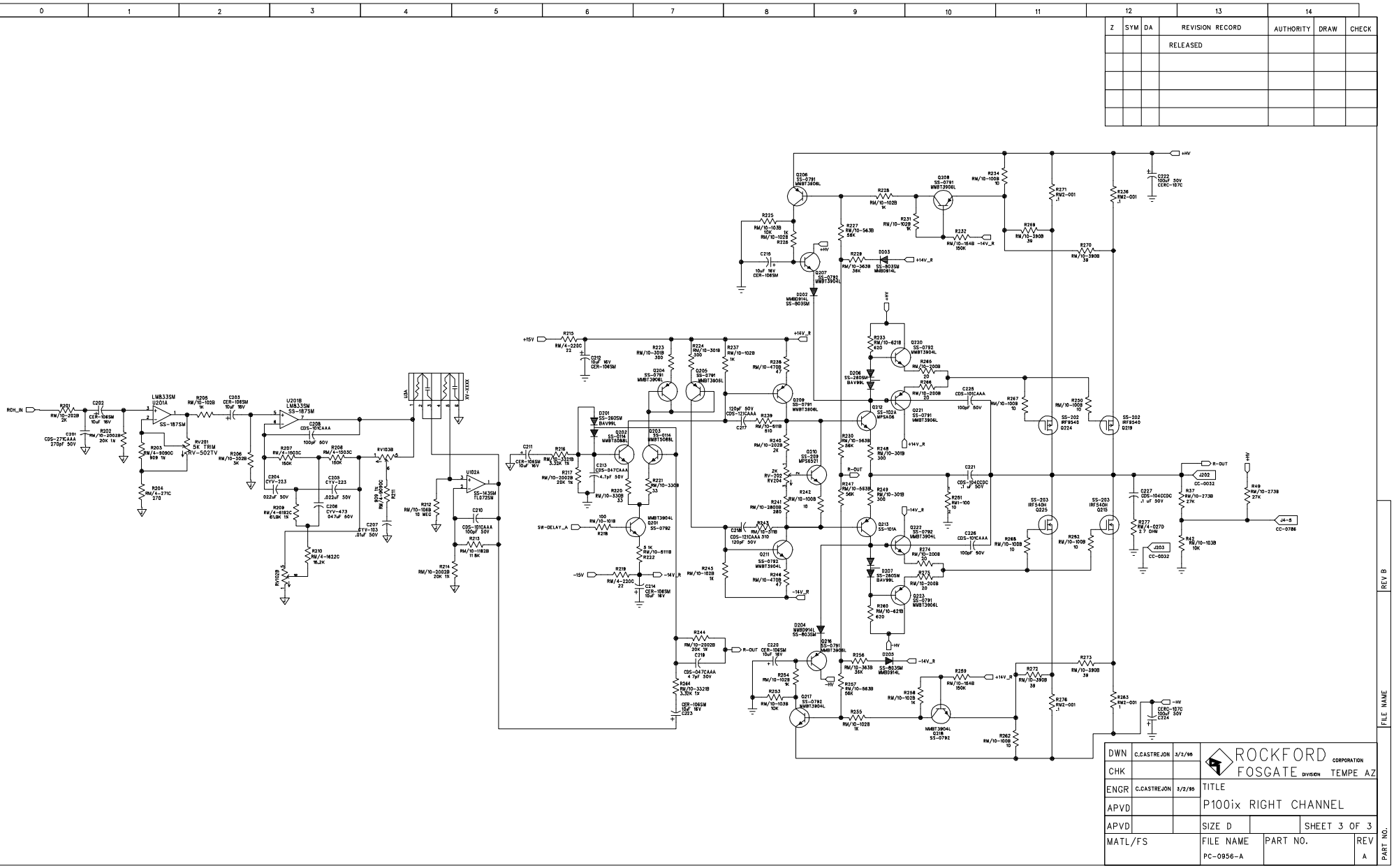

| Z | SYM | DA | REVISION RECORD | AUTHORITY | DRAW | CHECK |
|---|---|---|---|---|---|---|
| | | | RELEASED | | | |

| | | | | |
|---|---|---|---|---|
| DWN | C.CASTREJON | 3/2/95 | ROCKFORD FOSGATE CORPORATION DIVISION TEMPE AZ | |
| CHK | | | | |
| ENGR | C.CASTREJON | 3/2/95 | TITLE | |
| APVD | | | P100ix RIGHT CHANNEL | |
| APVD | | | SIZE D | SHEET 3 OF 3 |
| MATL/FS | | | FILE NAME PC-0956-A | PART NO. REV A |

REV B

FILE NAME

PART NO.