NOTES: UNLESS SPECIFIED OTHERWISE
1. ALL RESISTORS IN OHMS
2. ALL CAPACITORS IN MICROFARADS
3. COMMON PARTS DESIGNATORS 1 TO 99
4. LEFT CHANNEL DESIGNATORS 101 TO 199
5. RIGHT CHANNEL 201 TO 299

Z	SYM	DA	REVISION RECORD	AUTHORITY	DRAW	CHECK
			RELEASED			

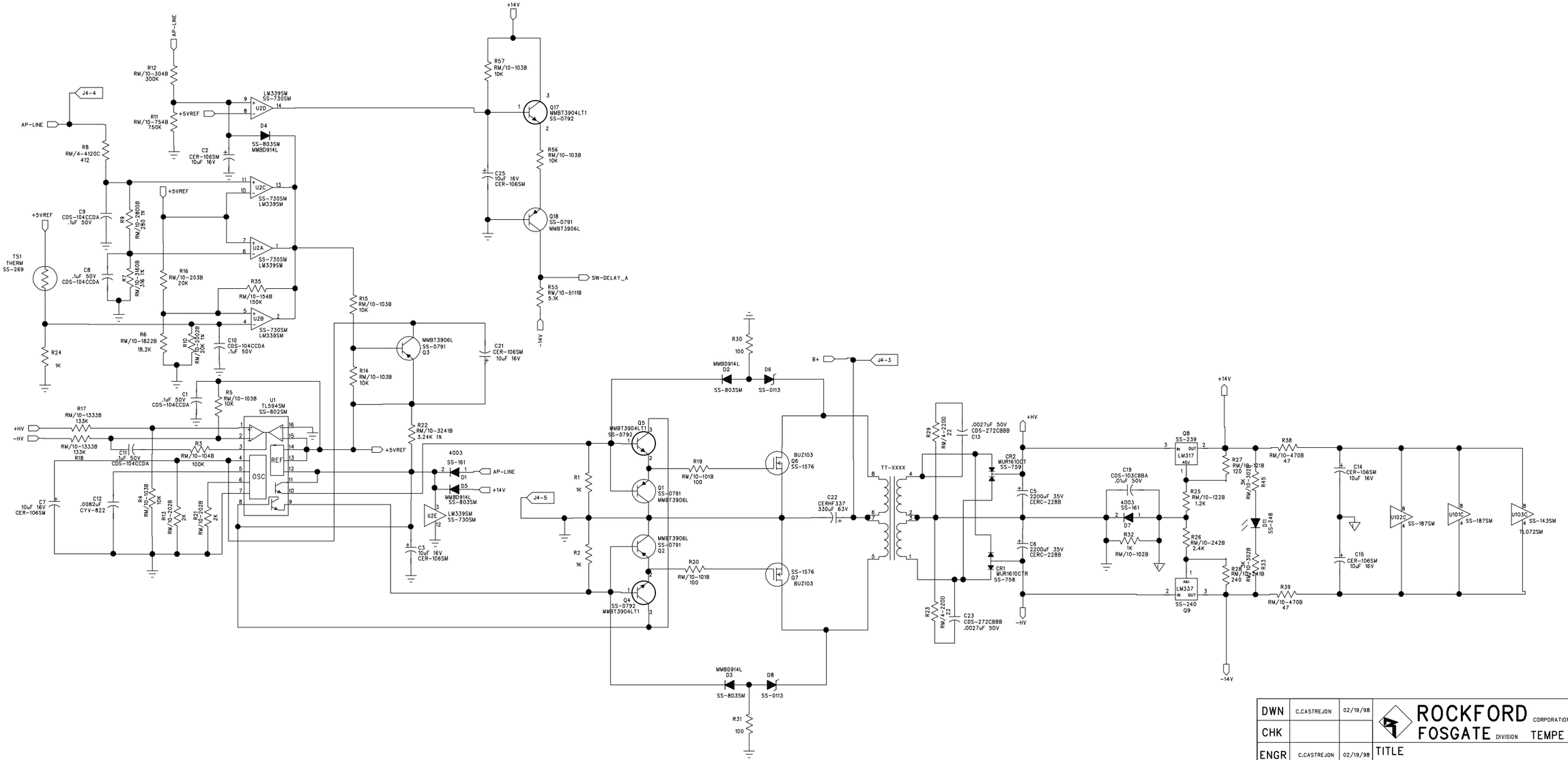

DWN	C.CASTREJON	02/19/98	ROCKFORD FOSGATE CORPORATION DIVISION TEMPE AZ
CHK			
ENGR	C.CASTREJON	02/19/98	TITLE: PUNCH 150.1 POWER SUPPLY
APVD	C.CASTREJON	02/19/98	
APVD			SIZE: A / SCALE: / SHEET 1 OF 2
MATL/FS			FILE NAME: PC-2031-A / PART NO. / REV: B

REV A
FILE NAME
PART NO.

Z	SYM	DA	REVISION RECORD	AUTHORITY	DRAW	CHECK
			RELEASED			

NOTES: UNLESS SPECIFIED OTHERWISE
1. ALL RESISTORS IN OHMS
2. ALL CAPACITORS IN MICROFARADS
3. COMMON PARTS DESIGNATORS 1 TO 99
4. LEFT CHANNEL DESIGNATORS 101 TO 199
5. RIGHT CHANNEL 201 TO 299

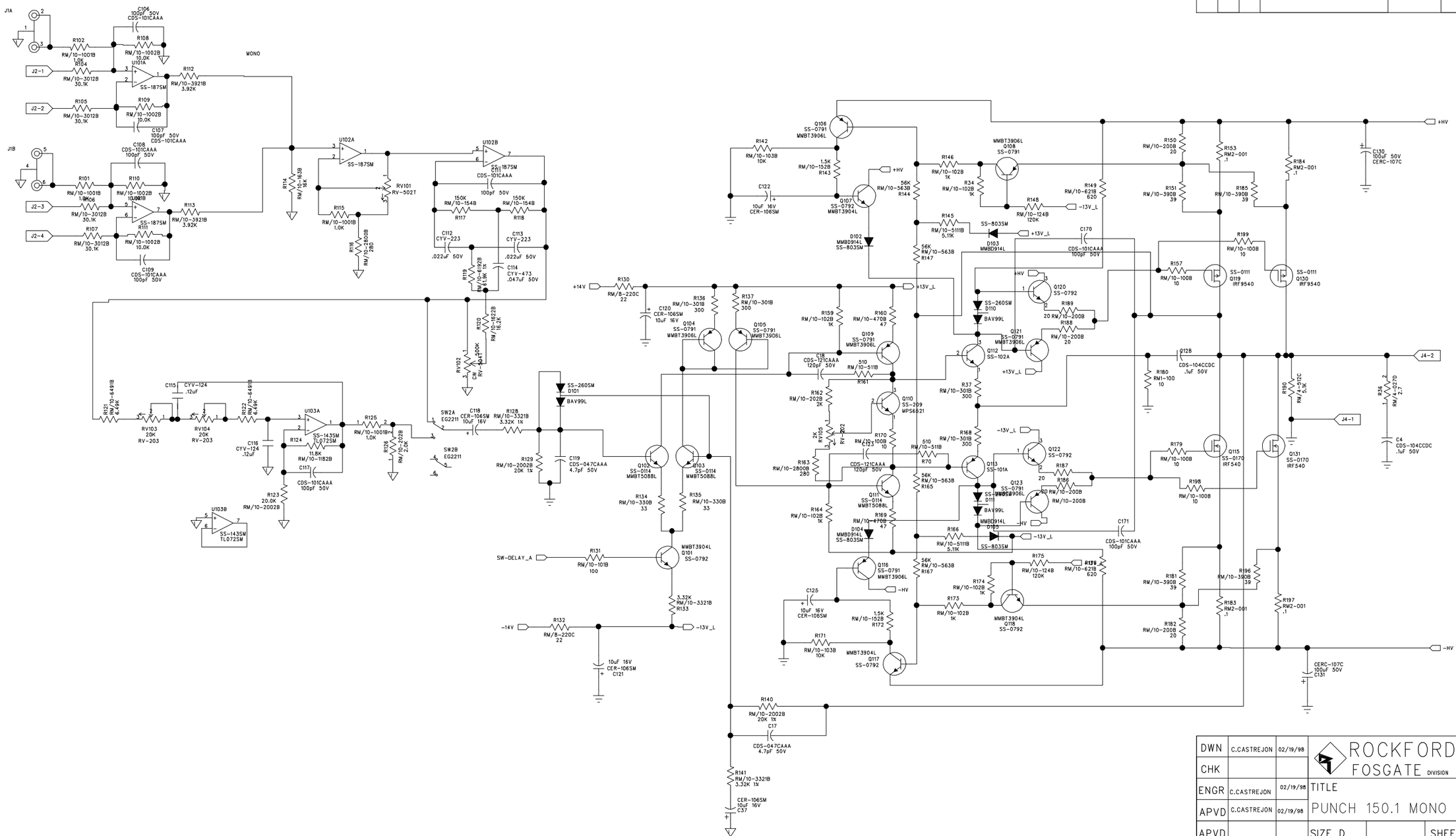

DWN	C.CASTREJON	02/19/98	ROCKFORD FOSGATE CORPORATION DIVISION TEMPE AZ
CHK			
ENGR	C.CASTREJON	02/19/98	TITLE: PUNCH 150.1 MONO
APVD	C.CASTREJON	02/19/98	
APVD			SIZE D — SHEET 2 OF 2
MATL/FS			FILE NAME: PC-2031-B — PART NO. — REV: B

REV A | FILE NAME | PART NO.