0	1	2	3	4	5	6	7	8	9	10	11	12	13	14

NOTES: UNLESS SPECIFIED OTHERWISE
1. ALL RESISTORS IN OHMS
2. ALL CAPACITORS IN MICROFARADS
3. COMMON PARTS DESIGNATORS 1 TO 99
4. LEFT CHANNEL DESIGNATORS 101 TO 199
5. RIGHT CHANNEL 201 TO 299

Z	SYM	DA	REVISION RECORD	AUTHORITY	DRAW	CHECK
			RELEASED			

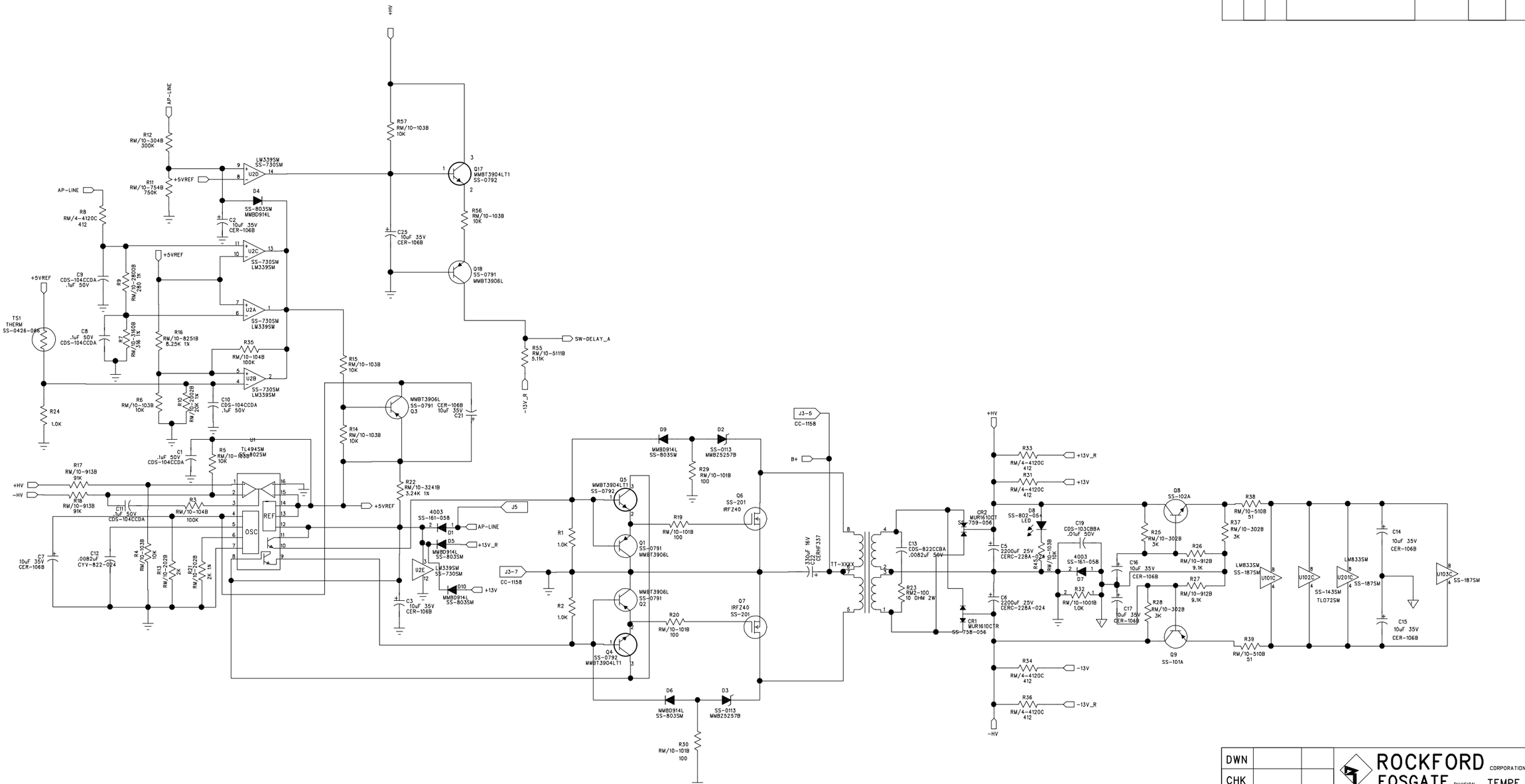

DWN			ROCKFORD FOSGATE CORPORATION DIVISION TEMPE AZ		
CHK			TITLE		
ENGR	C. Castrejon	03/03/98	150a2 POWER SUPPLY		
APVD	C. Castrejon	03/03/98			
APVD			SIZE	SCALE	SHEET 1 OF 3
MATL/FS			FILE NAME	PART NO.	REV b

REV | FILE NAME | PART NO.

Z	SYM	DA	REVISION RECORD	AUTHORITY	DRAW	CHECK
			RELEASED			

NOTES: UNLESS SPECIFIED OTHERWISE
1. ALL RESISTORS IN OHMS
2. ALL CAPACITORS IN MICROFARADS
3. COMMON PARTS DESIGNATORS 1 TO 99
4. LEFT CHANNEL DESIGNATORS 101 TO 199
5. RIGHT CHANNEL 201 TO 299

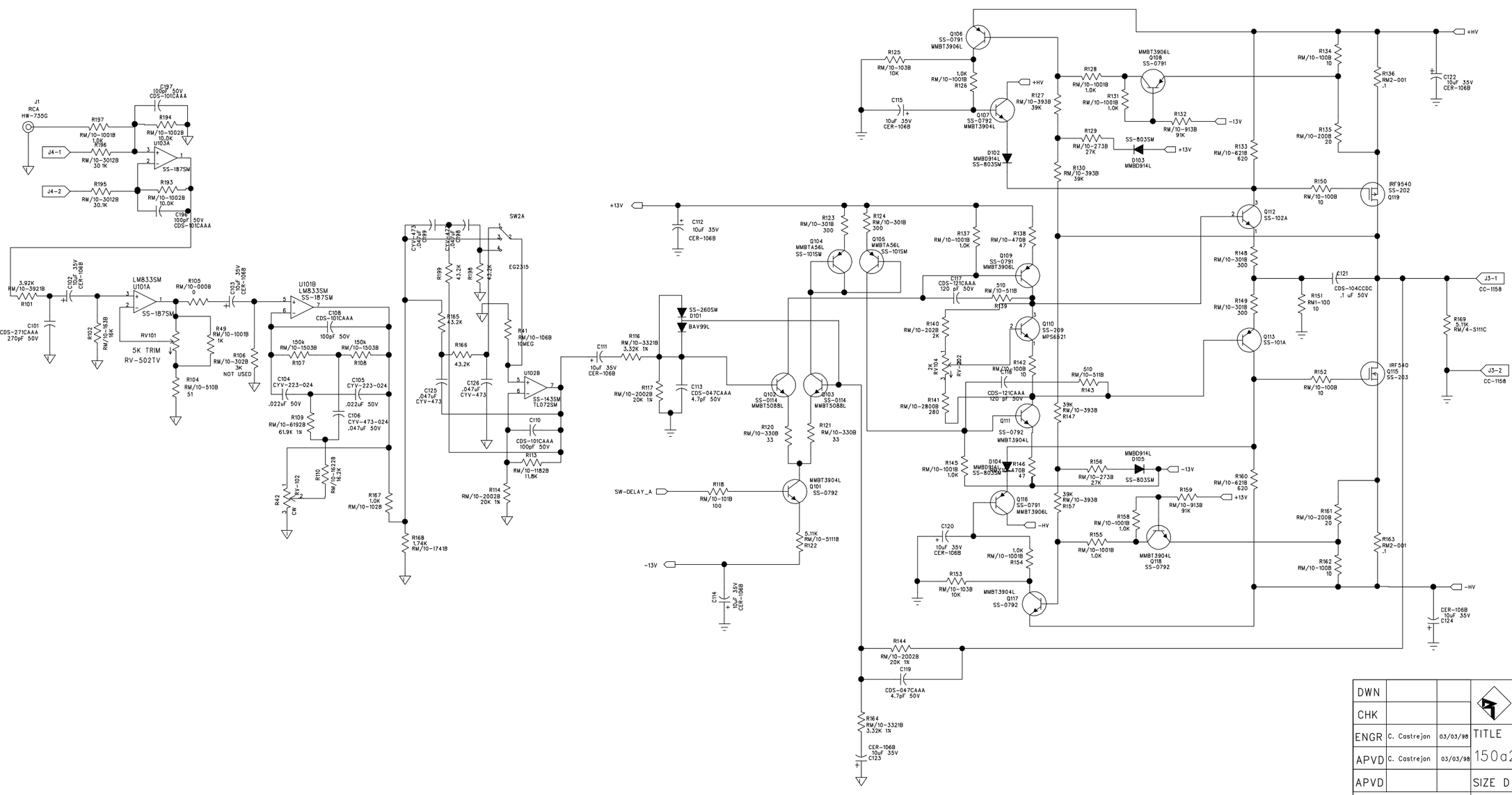

DWN			ROCKFORD FOSGATE CORPORATION DIVISION TEMPE AZ
CHK			
ENGR	C. Castrejon	03/03/98	TITLE: 150a2 LEFT CHANNEL
APVD	C. Castrejon	03/03/98	
APVD			SIZE D — SHEET 2 OF 3
MATL/FS			FILE NAME — PART NO. — REV b

REV A | FILE NAME | PART NO.

pc-2033b.sch-3 - Thu Dec 31 11:29:12 1998

Z	SYM	DA	REVISION RECORD	AUTHORITY	DRAW	CHECK
			RELEASED			

NOTES: UNLESS SPECIFIED OTHERWISE
1. ALL RESISTORS IN OHMS
2. ALL CAPACITORS IN MICROFARADS
3. COMMON PARTS DESIGNATORS 1 TO 99
4. LEFT CHANNEL DESIGNATORS 101 TO 199
5. RIGHT CHANNEL 201 TO 299

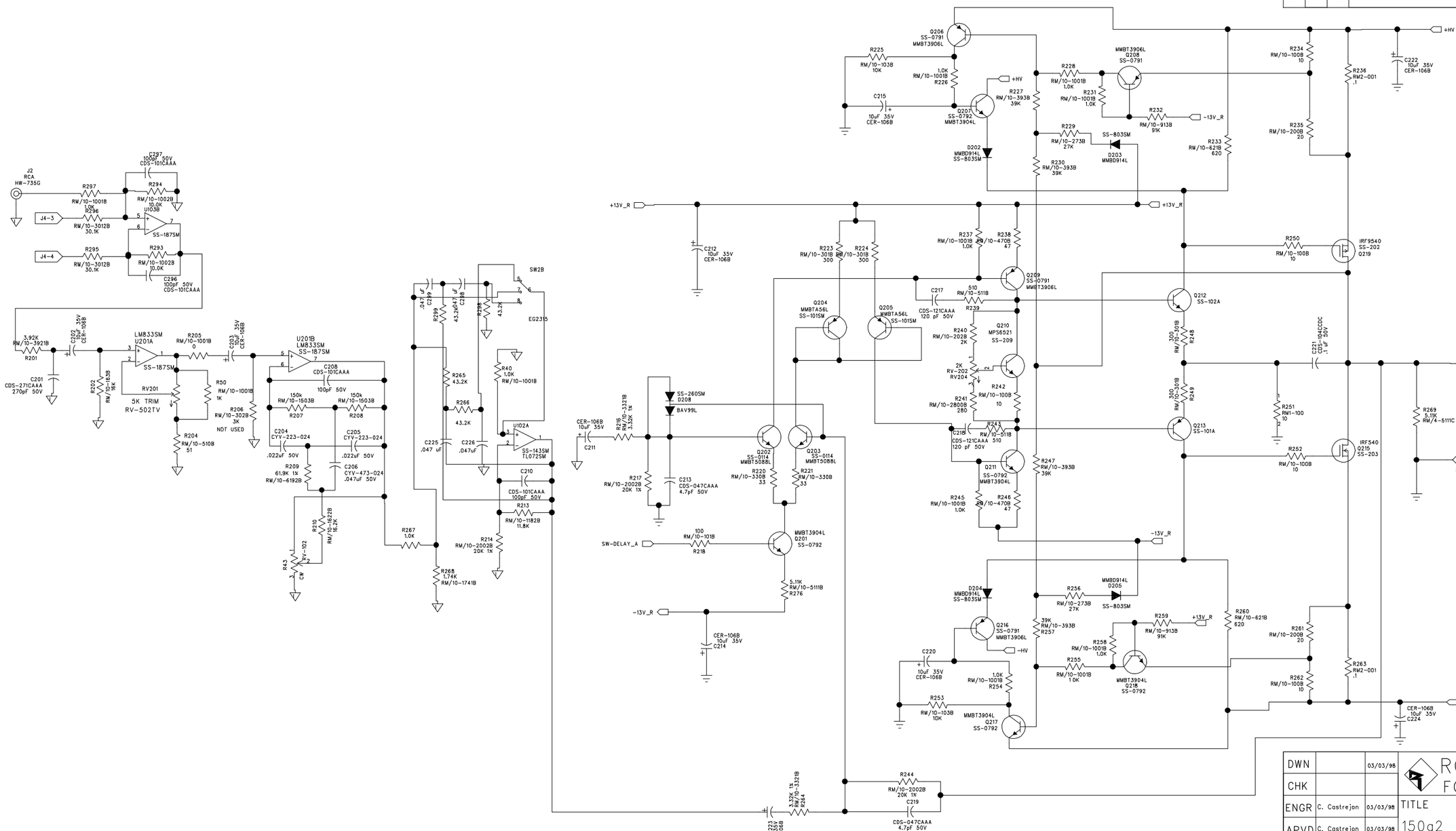

DWN		03/03/98	ROCKFORD FOSGATE CORPORATION DIVISION TEMPE AZ
CHK			
ENGR	C. Castrejon	03/03/98	TITLE: 150a2 RIGHT CHANNEL
APVD	C. Castrejon	03/03/98	
APVD			SIZE D / SHEET 3 OF 3
MATL/FS			FILE NAME / PART NO. / REV B

REV A | FILE NAME | PART NO.