Z	SYM	DA	REVISION RECORD	AUTHORITY	DRAW	CHECK
			RELEASED			

NOTES: UNLESS SPECIFIED OTHERWISE
1. ALL RESISTORS IN OHMS
2. ALL CAPACITORS IN MICROFARADS
3. COMMON PARTS DESIGNATORS 1 TO 99
4. LEFT CHANNEL DESIGNATORS 101 TO 199
5. RIGHT CHANNEL 201 TO 299

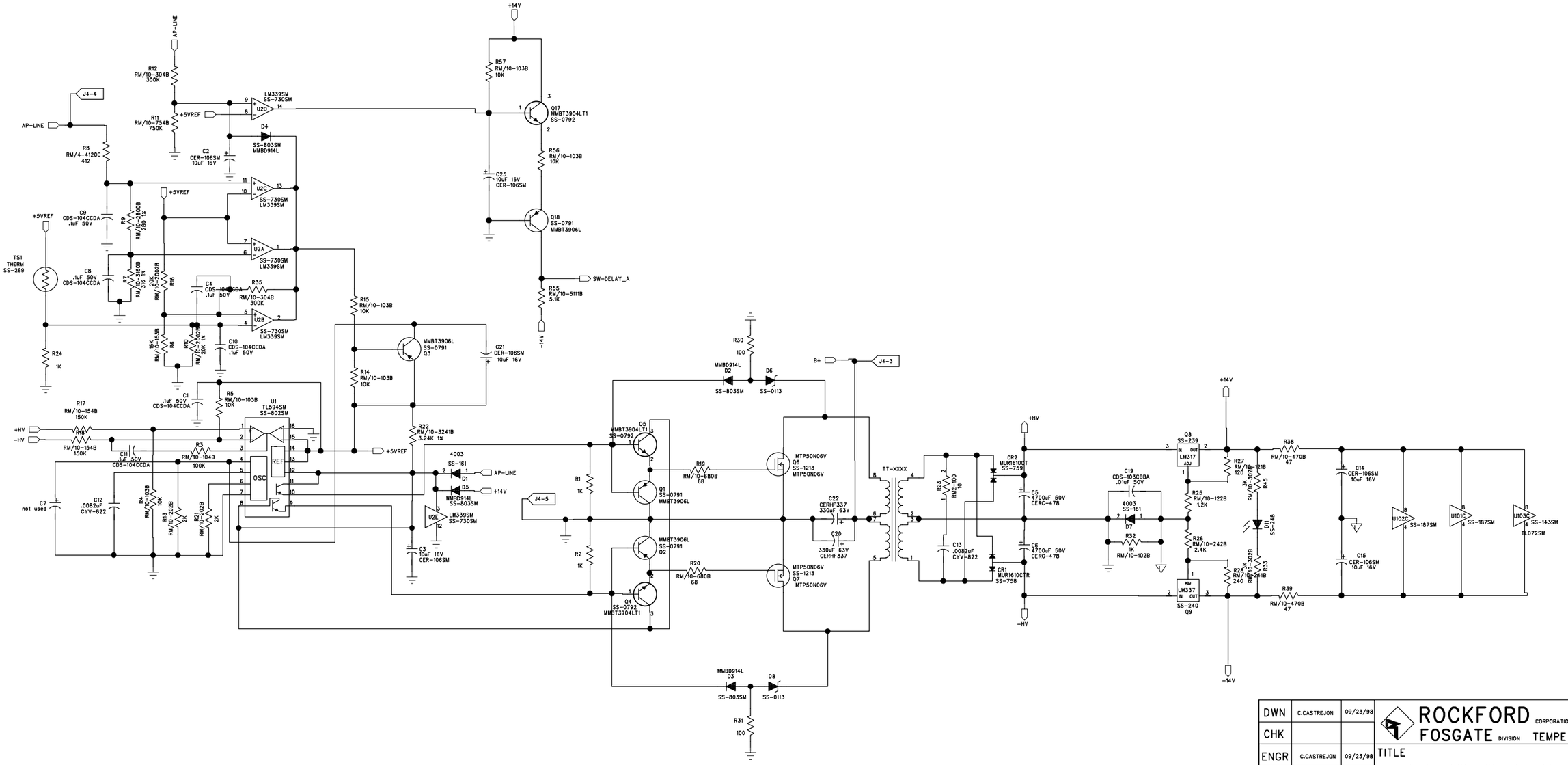

DWN	C.CASTREJON	09/23/98	ROCKFORD FOSGATE CORPORATION DIVISION TEMPE AZ		
CHK			TITLE		
ENGR	C.CASTREJON	09/23/98	PUNCH 200.1 POWER SUPPLY		
APVD	C.CASTREJON	09/23/98			
APVD			SIZE	SCALE	SHEET 1 OF 3
MATL/FS			FILE NAME: PC-2034-C	PART NO.	REV: C

REV A | FILE NAME | PART NO.

Z	SYM	DA	REVISION RECORD	AUTHORITY	DRAW	CHECK
			RELEASED			

NOTES: UNLESS SPECIFIED OTHERWISE
1. ALL RESISTORS IN OHMS
2. ALL CAPACITORS IN MICROFARADS
3. COMMON PARTS DESIGNATORS 1 TO 99
4. LEFT CHANNEL DESIGNATORS 101 TO 199
5. RIGHT CHANNEL 201 TO 299

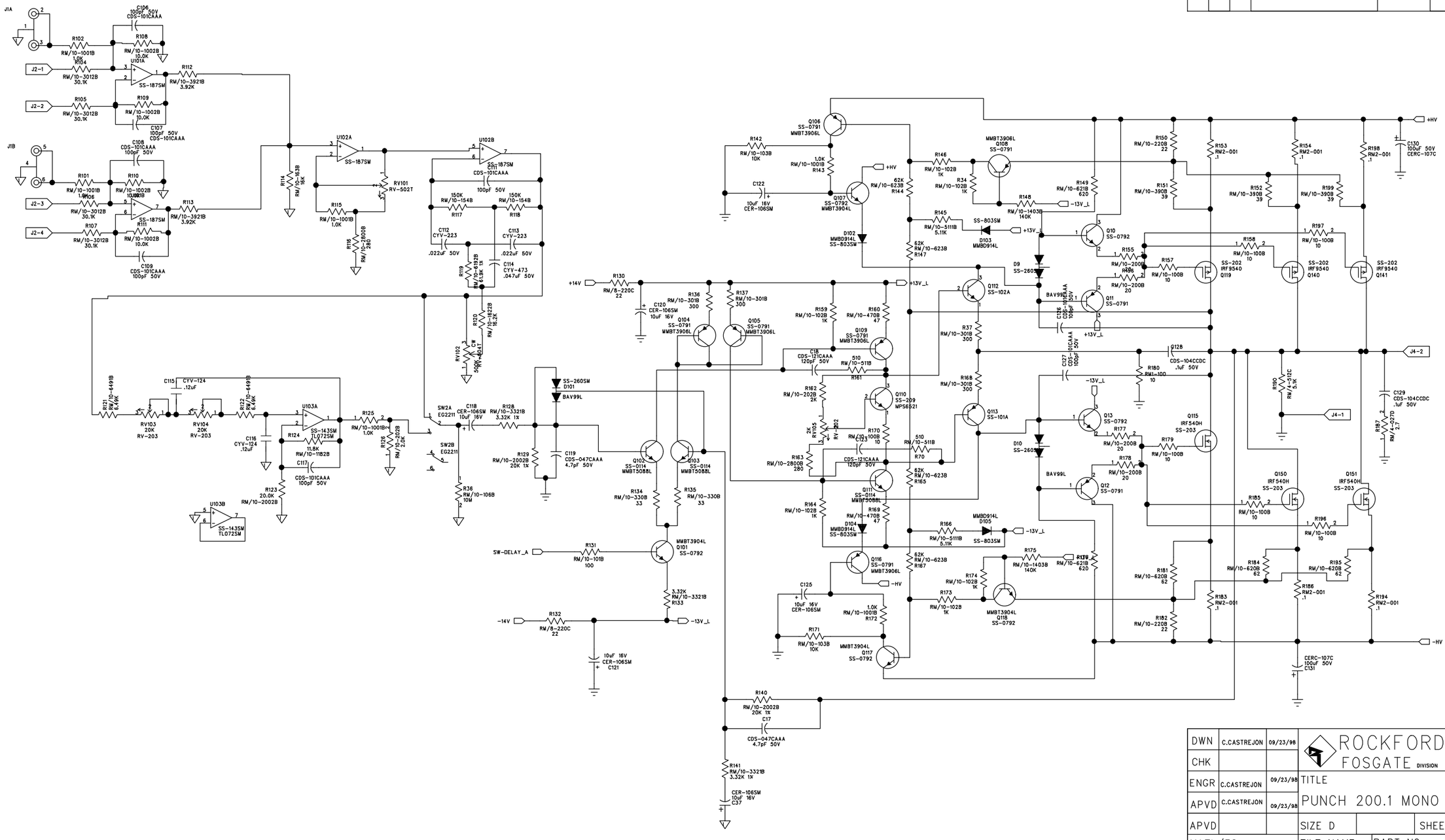

DWN	C.CASTREJON	09/23/98	ROCKFORD FOSGATE CORPORATION DIVISION TEMPE AZ
CHK			
ENGR	C.CASTREJON	09/23/98	TITLE
APVD	C.CASTREJON	09/23/98	PUNCH 200.1 MONO
APVD			SIZE D / SHEET 2 OF 3
MATL/FS			FILE NAME: PC-2034-C / PART NO. / REV: C

REV A | FILE NAME | PART NO.