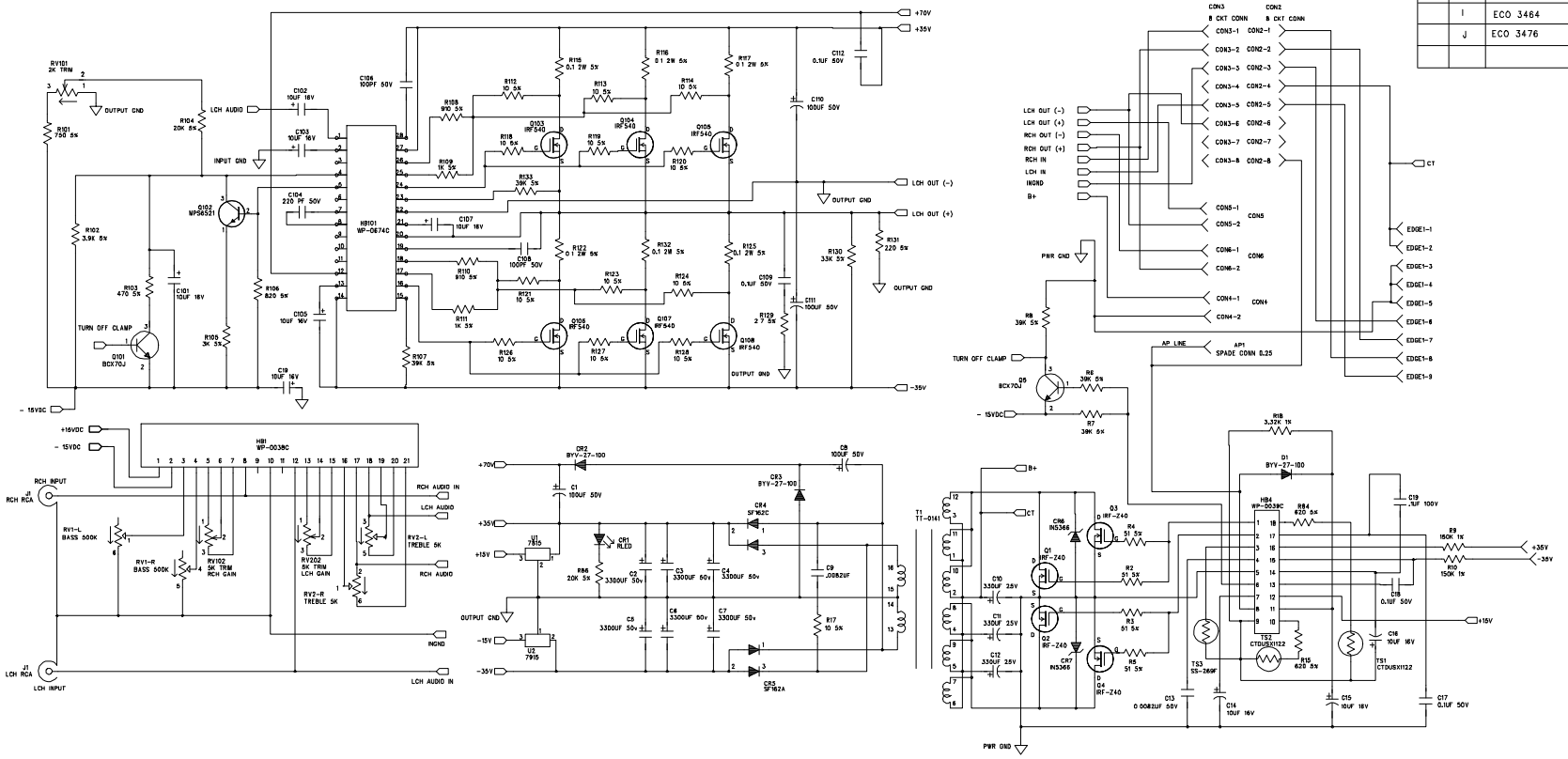

CORD	REV	REVISION RECORD	AUTHORITY	DATE
	A	PRODUCTION RELEASE ECO 3032	W.C.	2-93
	B	ECO 3066	W.C.	3-93
	C	ECO 3132	W.C.	5-93
	D	ECO 3141	W.C.	5-93
	E	ECO 3251	W.C.	7-93
	F	ECO 3254	W.C.	7-93
	G	ECO 3315	W.C	7-93
	H	ECO 3409	W.C.	11-93
	I	ECO 3464	W.C.	3-94
	J	ECO 3476		

DWN	C.C.	8/25/92	ROCKFORD CORPORATION FOSGATE DIVISION TEMPE AZ
CHK			
ENGR	JJP	12/18/92	TITLE: PUNCH 200DSM SCHEMATIC
APVD			
APVD			SIZE B SCALE SHEET 1 OF 1
MATL/FS			FILE NAME SCH0004 PART NO. SCH-0004 REV J