SUBSTITUTE PART # SS-0274 (HARRIS IRF540)
FOR REF DES Q142 143 144 145 146 147
242 243 244 245 246 247
PER ECO 3698

RM/10-101B (100 OHM 5%) HAS BEEN
REPLACED. REF DES R46 47
NEW PART # RM/10-220B (22 OHM 5%)
PER ECO 3695

RM/10-220B (22 OHM 5%) HAS BEEN
REPLACED. REF DES R46 47
NEW PART # RM/10-100B (10 OHM 5%)
PER ECO 3705

SS-201 (IRF-Z40) HAS BEEN
REPLACED. REF DES Q6 7 10 11
NEW PART # SS-0940 (IRF-Z44)
PER ECO 3725

CORD	REV	REVISION RECORD	AUTHORITY	DATE
	A	PRODUCTION RELEASEE ECO 3637	W.C.	12-94
	B	ECO 3698	H.M.	12-94
	C	ECO 3695	H.M.	12-94
	D	ECO 3705	H.M.	12-94
	E	ECO 3725	H.M.	12-94
	F	ECO 3851	H.M.	5-95
	G	ECO 3900 SUB SS-0940 (IRFZ44) FOR SS-201 (RFZ40)	H.M.	8-95
	H	ECO 3934 REPLACE SS-0940-056 (IRFZ44) REF DES Q6 Q7 Q10 Q11 NEW PART # SS-201-056 (IRFZ40)	H MILLER	8-95

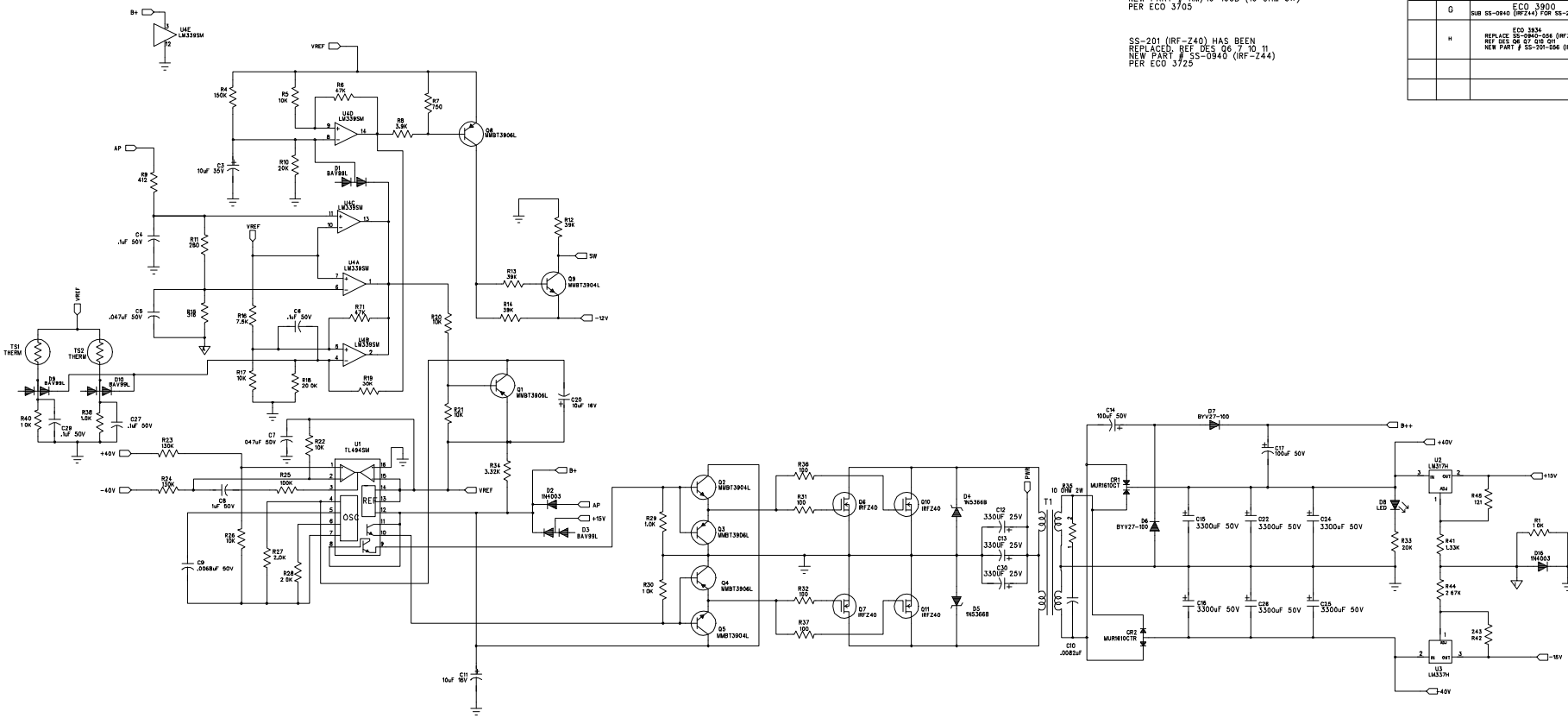

DWN	Rocheleau	08/18/94	
CHK			
ENGR	Rocheleau	08/18/94	
APVD			
APVD			
MATL/FS			

ROCKFORD FOSGATE CORPORATION DIVISION TEMPE AZ

TITLE
P200 TOPAZ POWER SUPPLY

SIZE B | SHEET 1 OF 4

FILE NAME	PART NO.	REV
SCH0766C	SCH-0766-C	H

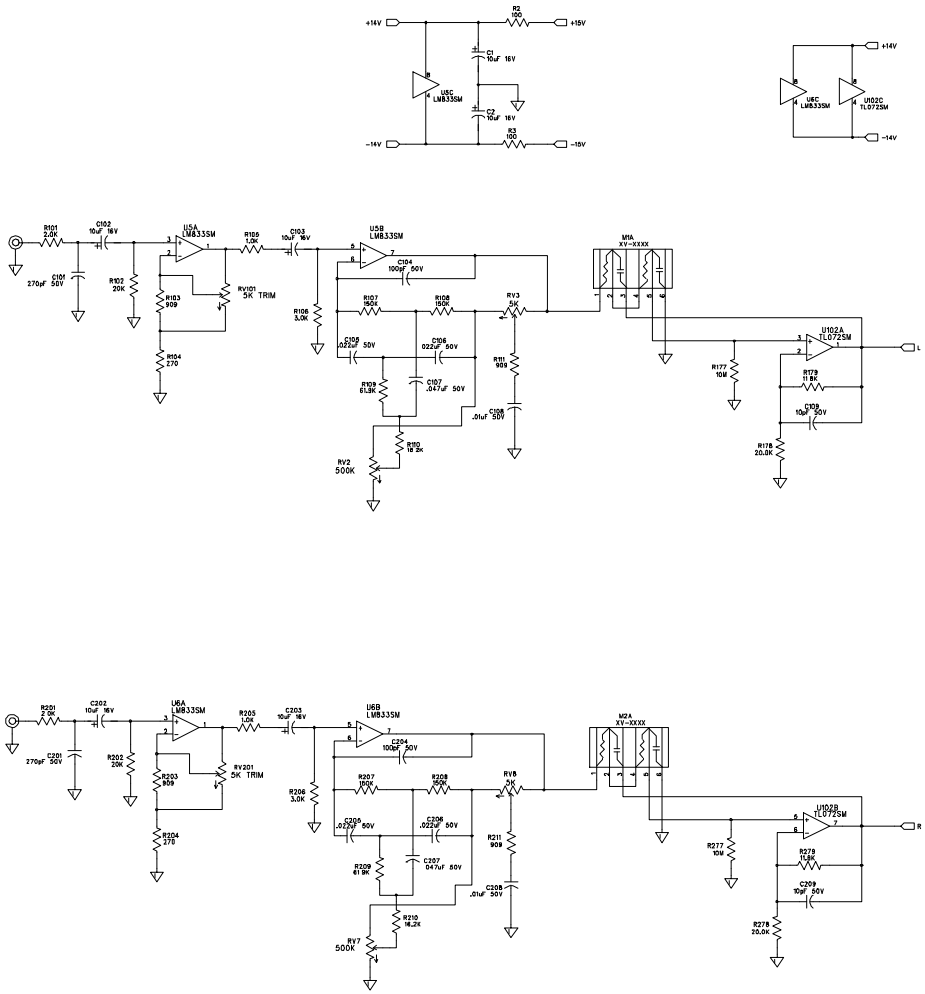

DWN	Rocheleau	08/18/94	ROCKFORD FOSGATE CORPORATION DIVISION TEMPE AZ	
CHK				
ENGR	Rocheleau	08/18/94	TITLE P200 TOPAZ INPUT AND CROSSOVER	
APVD				
APVD			SIZE B	SHEET 2 OF 4
MATL/FS			FILE NAME SCH0766C	PART NO. SCH-0766-C REV H

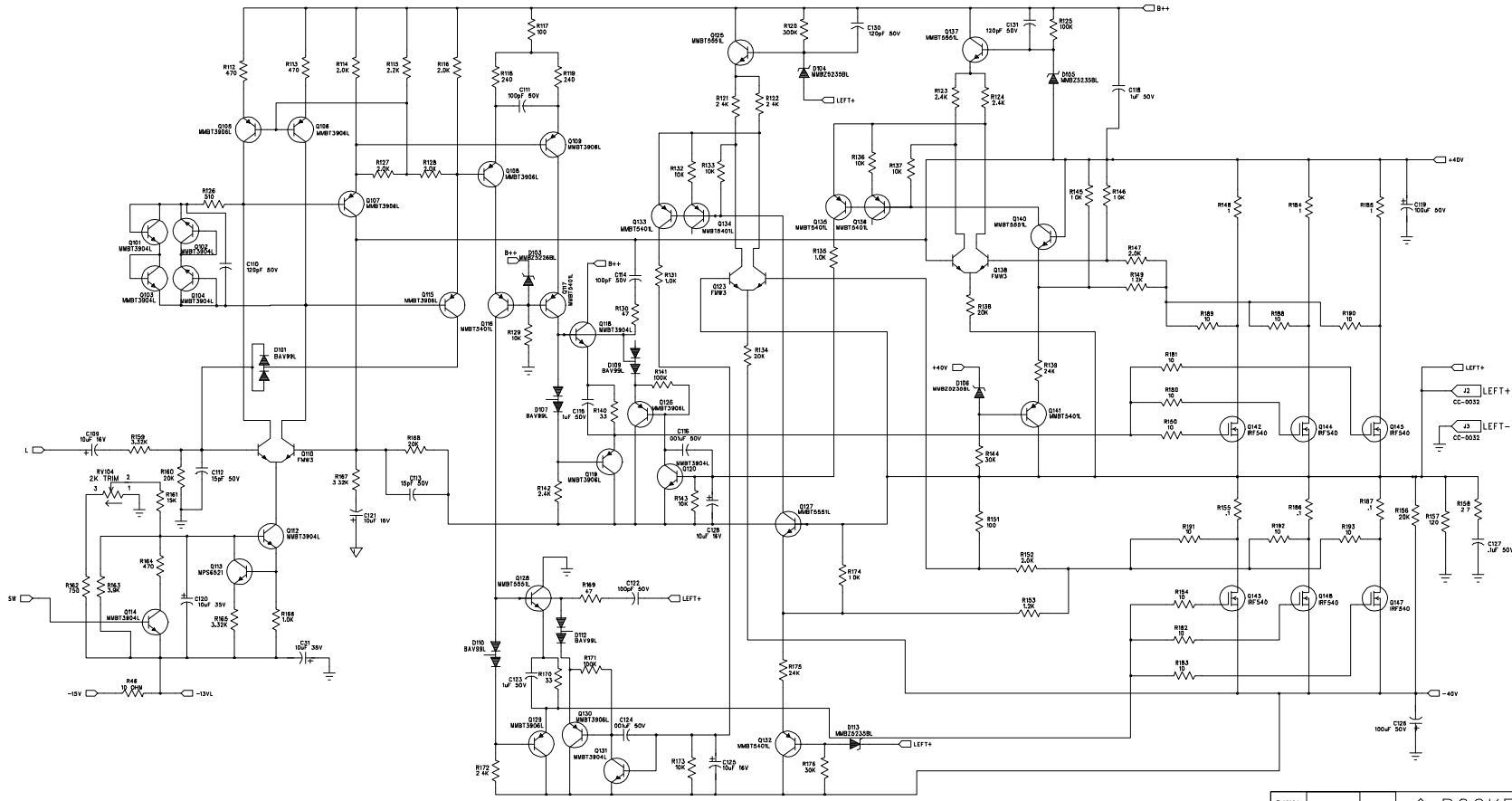

DWN	Rocheleau	08/18/94	ROCKFORD FOSGATE CORPORATION DIVISION TEMPE AZ	
CHK				
ENGR	Rocheleau	08/18/94	TITLE P200 TOPAZ LEFT CHANNEL	
APVD				
APVD			SIZE B	SHEET 3 OF 4
MATL/FS			FILE NAME SCH0766C	PART NO. SCH-0766-C REV H

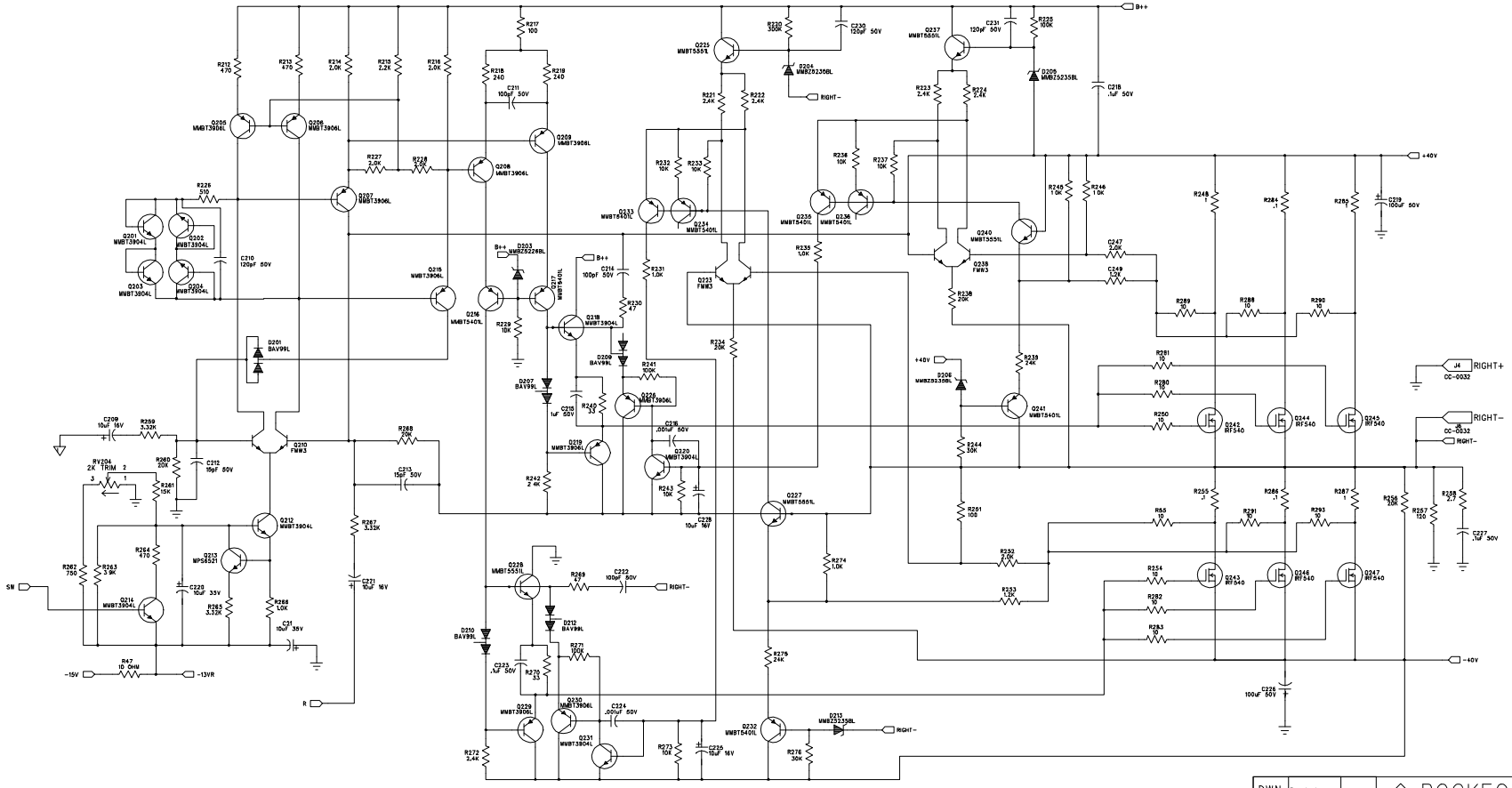

DWN	Rocheleau	08/18/94	ROCKFORD FOSGATE CORPORATION DIVISION TEMPE AZ	
CHK				
ENGR	Rocheleau	08/18/94	TITLE P200 TOPAZ RIGHT CHANNEL	
APVD				
APVD			SIZE B	SHEET 4 OF 4
MATL/FS			FILE NAME SCH0766C	PART NO. SCH-0766-C REV H