CORD	REV	REVISION RECORD	AUTHORITY	DATE	CHECK
	A	RELEASED	W.C.	8-91	
	B	ECO 2139	W.C.	10-91	
	C	ECO 2165	W.C.	10-91	
	D	ECO 2216	W.C.	10-91	
	E	ECO 2584	W.C.	1-92	
	F	ECO 2703	W.C.	9-92	
	G	ECO 2715	W.C.	9-92	
	H	ECO 2956	W.C.	12-92	
	I	ECO 3019	WC	3/23/93	
	J	ECO 3067	WC	3/23/93	

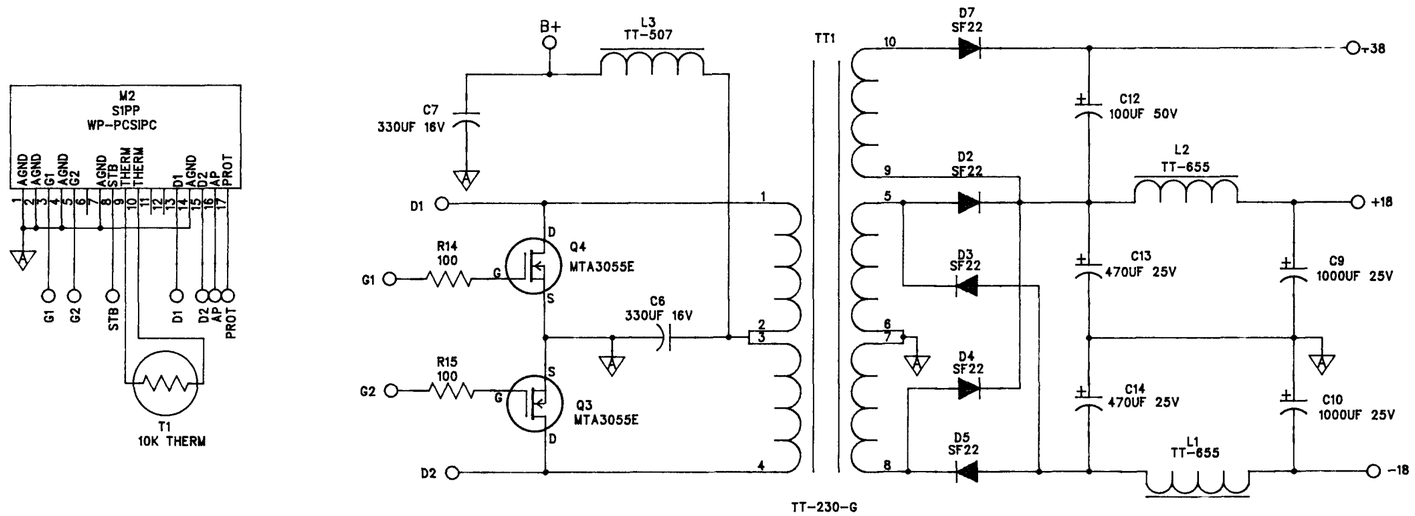

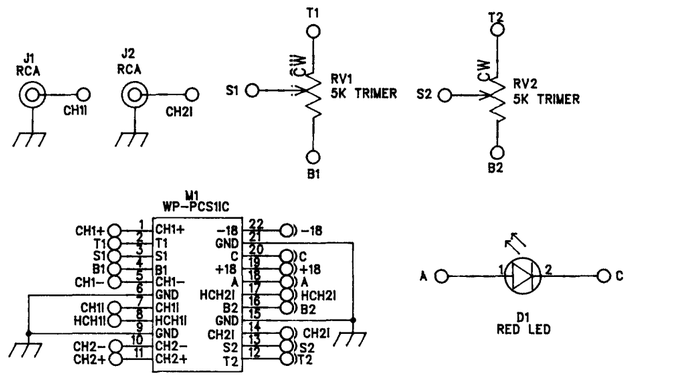

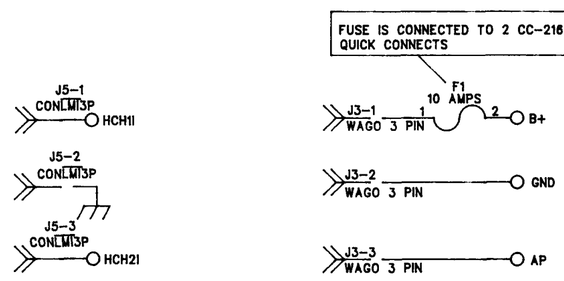

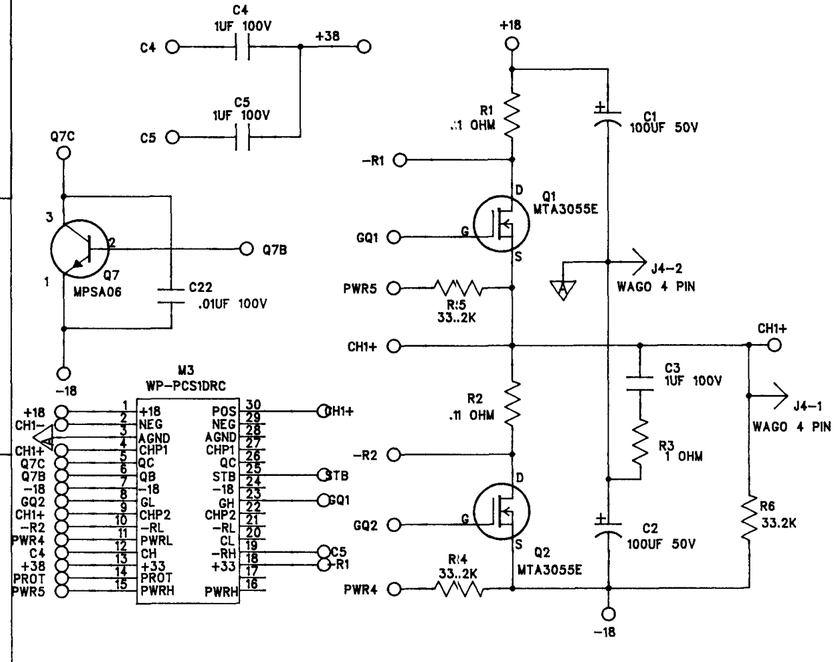

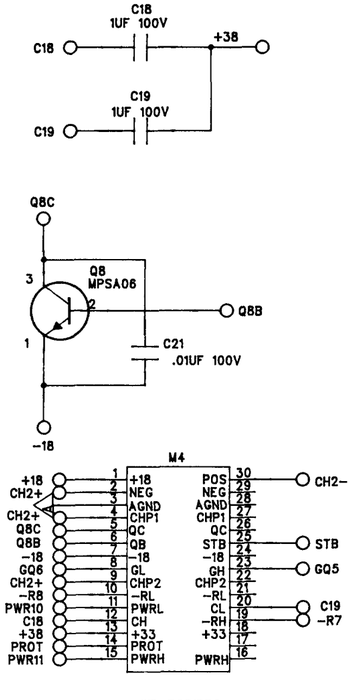

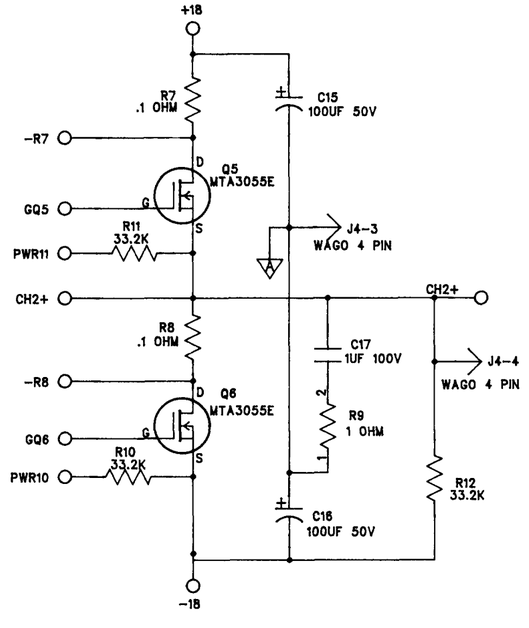

CONFIDENTIAL

© Copyright 19 93 Rockford Corporation. This drawing is the property of Rockford Corporation and embodies confidential information, trade secret information, and/or know-how which is the property of Rockford Corporation. By accepting this drawing, the recipient agrees not to provide, or otherwise make available, the drawing, or any information or know-how embodied therein, to any third party without prior written authorization.

DWN	C. SHAH	6/30/91
CHK	AC	3/18/93
ENGR	CLIFFORD	6/30/91
APVD	D.N	4/14/93
APVD		3/27/93

ROCKFORD CORPORATION
FOSGATE DIVISION TEMPE AZ

TITLE
SCHEMATIC:
SERIES ONE 230SD AMPLIFIER

SIZE C	SCALE	SHEET 1 OF 1

MATL/FS	FILE NAME	PART NO.	REV
	230SDJ	SCH-230	J