NOTES: UNLESS SPECIFIED OTHERWISE
1. ALL RESISTORS IN OHMS
2. ALL CAPACITORS IN MICROFARADS
3. LEFT FRONT CHANNEL SHOWN ONLY
4. REAR REF DES IN PARENTHESIS FRONT (REAR)
5. REF DES:
X100 – X199 LEFT FRONT
X200 – X299 RIGHT FRONT
X300 – X399 LEFT REAR
X400 – X499 RIGHT REAR

CROSSOVER CARD
CARD 3
J4 CC-0233
R44 10 MEG
INGND
U9-A TL072
C420 100PF
R30 11.8K OHM 1%
R45 10 MEG
R31 20K OHM 1%
R32 220 OHM 5%
RIGHT F+R :SUM
J1 CCH-151G
U9-B TL072
C24 .1UF 50V
C25 .1UF 50V
+15V
+40 V
-15V
C32 100PF
R33 11.8K OHM 1%
R34 20K OHM 1%
+20V
J1 LEFT F+R SUM
R35 220 OHM 5%
OUTPUT GND
-20V
CR2 BYV-27-100
C1 100UF 50V
CR1 RLED
R1 16K OHM 5%
U1 7815
C36 10uF 35V
C37 10uF 35V
C26 0.1UF 50V
U2 7915
C3 3300UF 35V
C38 3300UF 35V
C39 3300UF 35V
C4 3300UF 35V
C2 3300UF 35V
C5 3300UF 35V
CR4 SF162C
CR3 BYV-27-100
CR5 SF162A
C8 100UF 50V
R42 220 OHM 5%
C42 .0027UF 50V
C43 .0027UF 50V
R43 220 OHM 5%
T1 TT-0291
R40 220 OHM 5%
C40 .0027UF 50V
B+
C60 2200UF 50V
C61 2200UF 50V
C62 2200UF 50V
C41 .0027UF 50V
R46 220 OHM 5%
CR6 IN5366
CR7 IN5366
Q3 IRF-Z40
Q1 IRF-Z40
Q2 IRF-Z40
Q4 IRF-Z40
R4 68 OHMS 5%
R2 68 OHMS 5%
R3 68 OHMS 5%
R5 68 OHMS 5%
C13 .0082UF 50V
CON4-2
R6 24K OHM 5%
PWR GND
TURN OFF CLAMP
CON3
Q5 BC846BL
- 15V
R6 24K OHM
R7 24K OHM
CON2 CC-0183 SPADE CONN 0.25 AP LINE
HB2 WP-0039C
CR8 BYV-27-100
C19 0.1UF 50V
R9 100K OHM 5%
R10 100K OHM 5%
+20V
-20V
+15V
R99 7.5K OHM
C16 10uF 35V
TS2 SS-0426
R15 280 OHM 1%
TS1 SS-0426
C14 10uF 35V
C15 10uF 35V
C17 0.1UF 50V

REAR INPUT SELECT
REAR POLARITY
J1 RIGHT REAR
INGND
J1 RIGHT FRONT
INGND
SW1-A DPDT
SW2-A DPDT
INV
RIGHT REAR REAR MODULE PIN 12
U3-B LM833
R39 20K OHMS 1%
C67 47PF
R70 20K OHM 1%
R38 2K OHM 5%
C29 270PF 50V
R20 18K OHM 5%
R41 2K OHM 5%
R16 18K OHM 5%
C30 270PF 50V
R17 10K OHM 5%
U4-A LM833
R19 100PF 50V
R18 20K OHM 1%
R19 20K OHM 1%
U8-A LM833
RIGHT FRONT EQ
J1 LEFT REAR
INGND
SW1-B DPDT
SW2-B DPDT
INVERT
LEFT REAR EQ
R37 2K OHM 5%
R23 18K OHM 5%
C28 270PF 50V
U3A LM833
R28 20K OHM 1%
R29 20K OHM 1%
C421 47PF
R36 2K OHM 5%
C27 260PF 50V
R24 10K OHM 5%
U4B LM833
R25 20K OHM 1%
R26 100PF 50V
R26 20K OHM 1%
R27 18K OHM 5%
U8B LM833
J1 LEFT FRONT
INGND
LEFTFRON EQ

LEFT FRONT
LF
R135 2.15K OHM 1%
C112 10uF 35V
C113 270PF
U7A U11A (U10A U12A) LM833D
R136 20K OHM 1%
R137 909 OHM 1%
VR102 5K TRIM
1.62K OHM 5%
C114 10uF 35V
U7B U11B (U10B U12B) LM833D
C119 100PF 50V
R140
R141 150K OHM 5%
R142 150K OHM 5%
TREBLE 5K TRIM VR104
C115 0.022UF
C116 0.022UF
R143 61.9K OHM 5%
C117 0.047UF 50V
R144 1K OHMS 5%
C118 0.01UF 50V
R145 16.2K OHM 1%
R138 681 OHM 1%
BASS VR103 500K TRIM
LF TP

CROSSOVER CARD FRONT CON
CARD1(CARD2)
RIGHT
J4(J8) CC-0233
R146 10 MEG 5%
INGND
J15A TL072
C31 100PF
R246 10 MEG 5%
R232 11.8K OHM 1%
R234 20K OHM 1%
LEFT INGND
U5B TL072
C33 100PF
R132 11.8K OHM 1%
R134 20K OHM 1%
+12V
-12V
C20 .1UF 50V
C21 .1UF 50V
C202 10uF 35V
RIGHT FRONT - AMP INPUT PIN 2
-TP-201(401)
C102 10uF 35V
LEFT FRONT +AMP INPUT PIN 1
+TP-101(301)
C203 10uF 35V
RIGHT FRONT -AMP INPUT PIN 1
C103 10uF 35V
LEFT FRONT AMP INPUT - PIN 2

RV101 2K TRIM
OUTPUT GND
R101 750 OHM 5%
R104 15K OHM 5%
R102 3.9K OHM 5%
Q102 MPS652
R103 470 OHM 5%
TURN OFF CLAMP
Q101 BC846BL
C101 10uF 35V
3.32K OHM 1%
R105
R108 1K OHM 5%
- 15VDC
+40V
+20V
R115 0.1 OHM 2W
C106 100PF 50V
R108 2K OHM 5%
+ AMP INPUT
- AMP INPUT
HB101 WP-0674C
C104 220PF 50V
R118 10 OHM 5%
Q103 IRF540
R109 3.32K OHM 1%
R133 24K OHM 5%
C107 10uF 35V
C108 100PF 50V
R122 0.1 OHM 2W
R110 2K OHM 5%
R111 3.32K OHM 1%
R126 10 OHM 5%
Q106 IRF540
C105 10uF 35V
R107 24K OHM 5%
C110 100UF 50V
LCH OUT (-)
LCH OUT (+)
C109 0.1UF 50V
R119 2.7 OHM 5%
C111 100UF 50V
R130 24K OHM 5%
R131 220 OHM 2W
-20V

C10 (C44) 10uF 35V
C11 (C45) 10uF 35V
R52 100 OHM 5%
R53 100 OHM 5%
U7 U10 (U11,U12)
+15V
-15V
INGND
C44 .1UF 50V
C45 .1UF 50V
U11-12
U11-U12

CC-673
6 PIN CONN
RF IN
LR IN
RR IN
LF IN
CON12-1
CON12-2
CON12-3
CON12-4
CON12-5
CON12-6

R11 100 OHM 5%
INPUT GND
OUTPUT GND
PWR GND

NOTES
FOR REF DES VR104, VR204, VR304, VR404
PRIMARY PART # RV-5021 PIHER PT10MH2.55KB
SUBSTITUTE PART # RV-502F PIHER PT10MH2.55KBP
PER ECO 3344
FOR REF DES VR103, VR203, VR303, VR403
PRIMARY PART # RV-504F ANTLG PT10MH2.5500KC
SUBSTITUTE PART # RV-504C ANTLG PT10MH2.5500KCP
PER ECO 3344
FOR REF DES TS1, TS2
PRIMARY PART # SS-0426-063 CTDUSX1122PDSM (US SENSOR)
SUBSTITUTE PART # SS-269-063 1D10310313 (US SENSOR)
PER ECO 3317

FOR REF DES CR5
PRIMARY PART # SS-758-056 SF162C/MUR (MOT)
SUBSTITUTE PART # SS-763-056 MUR1615CTR (MOT)

FOR REF DES CR4
PRIMARY PART # SS-759-056 SF162/MUR (MOT)
SUBSTITUTE PART # SS-762-056 MUR1615CT (MOT)

FOR REF DES Q5, Q101, Q201, Q301, Q401
PRIMARY PART # SS-0357 BC846BL (MOT)
SUBSTITUTE PART # SS-209SM BCX70J (MOT)

CONFIDENTIAL
© Copyright 19____ Rockford Corporation. This drawing is the property of Rockford Corporation and embodies confidential information, trade secret information, and/or know-how which are the property of Rockford Corporation. By accepting this drawing, the recipient agrees not to provide, or otherwise make available, the drawing, or any information or know-how embodied therein, to any third [illegible] or written [illegible] permission.

DWN	C.C.	3–93	ROCKFORD FOSGATE CORPORATION DIVISION TEMPE AZ
CHK	[illegible]	[illegible]	TITLE: PUNCH 4080 DSM SCHEMATIC
ENGR	M.A.	5–93	
APVD			
APVD			SIZE D | SCALE 1X | SHEET 1 OF 2
MATL/FS			FILE NAME SCH0290 | PART NO. SCH–0290 | REV M

NOTES
FOR REF DES VR104, VR204, VR304, VR404
PRIMARY PART # RV-502I PIHER PT10MH2.55KB
SUBSTITUTE PART # RV-502F PIHER PT10MH2.55KBP
PER ECO 3344
FOR REF DES VR103, VR203, VR303, VR403
PRIMARY PART # RV-504F ANTLG PT10MH2.5500KC
SUBSTITUTE PART # RV-504C ANTLG PT10MH2.5500KCP
PER ECO 3344
FOR REF DES TS1, TS2
PRIMARY PART # SS-0426-063 CTOUSX1122PDSM (US SENSOR)
SUBSTITUTE PART # SS-269-063 1D10310313 (US SENSOR)
PER ECO 3317

FOR REF DES CR5
PRIMARY PART # SS-758-056 SF162C/MUR (MOT)
SUBSTITUTE PART # SS-763-056 MUR1615CTR (MOT)

FOR REF DES CR4
PRIMARY PART # SS-759-056 SF162/MUR (MOT)
SUBSTITUTE PART # SS-762-056 MUR1615CT (MOT)

FOR REF DES Q5, Q101, Q201, Q301, Q401
PRIMARY PART # SS-0357 BC846BL (MOT)
SUBSTITUTE PART # SS-2095M BCX70J (MOT)

FOR REF DES HB101
WP-0040C HAS BEEN CHANGED TO WP-0674C
PER ECO 3409

CORD	REV	REVISION RECORD	AUTHORITY	DATE
	C	PRODUCTION RELEASE ECO 3292	W.C.	8-93
	D	ECO 3317	W.C.	8-93
	E	ECO 3318	W.C.	8-93
	F	ECO 3344	W.C.	8-93
	G	ECO 3342	W.C.	9-93
	H	ECO 3354	W.C.	9-93
	I	ECO 3357	W.C.	9-93
	J	ECO 3361	W.C.	9-93
	K	ECO 3375	W.C.	9-93
	L	ECO 3406	W.C.	10-93
	M	ECO 3409	J.C.	10-93

CONFIDENTIAL

© Copyright 19 ____ Rockford Corporation. This drawing is the property of Rockford Corporation and embodies confidential information, trade secret information, and/or know-how which is the property of Rockford Corporation. By accepting this drawing, the recipient agrees not to provide, or otherwise make available, the drawing, or any information or know-how embodied therein, to any third party without written authorization.

DWN	C.C.	3-93
CHK		
ENGR	M.A.	5-93
APVD		
APVD	J.C.	10-93
MATL/FS		

ROCKFORD CORPORATION
FOSGATE DIVISION TEMPE AZ

TITLE
PUNCH 4080 DSM
SCHEMATIC

SIZE D | SCALE 1X | SHEET 2 OF 2

FILE NAME SCH0290 | PART NO. SCH-0290 | REV M

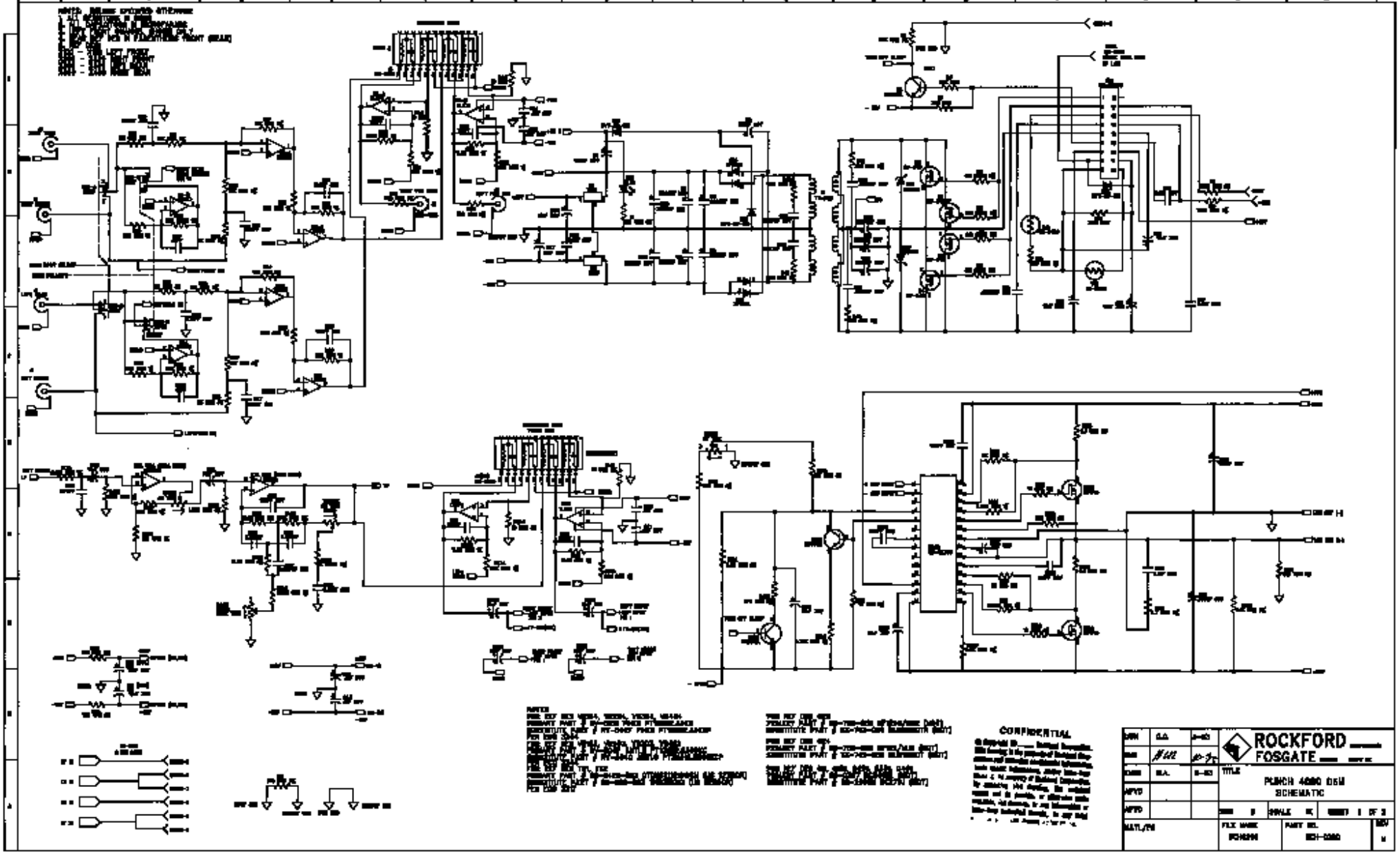
ROCKFORD
FOSGATE
TITLE
PUNCH 4000 DSM
SCHEMATIC
CONFIDENTIAL