PC-1088A.SCH-1 - Mon Nov 23 14:03:58 1998

Z	SYM	DA	REVISION RECORD	AUTHORITY	DRAW	CHECK
			RELEASED			

NOTES: UNLESS SPECIFIED OTHERWISE
1. ALL RESISTORS IN OHMS
2. ALL CAPACITORS IN MICROFARADS
3. COMMON PARTS DESIGNATORS 1 TO 99
4. LEFT CHANNEL DESIGNATORS 101 TO 199
5. RIGHT CHANNEL 201 TO 299

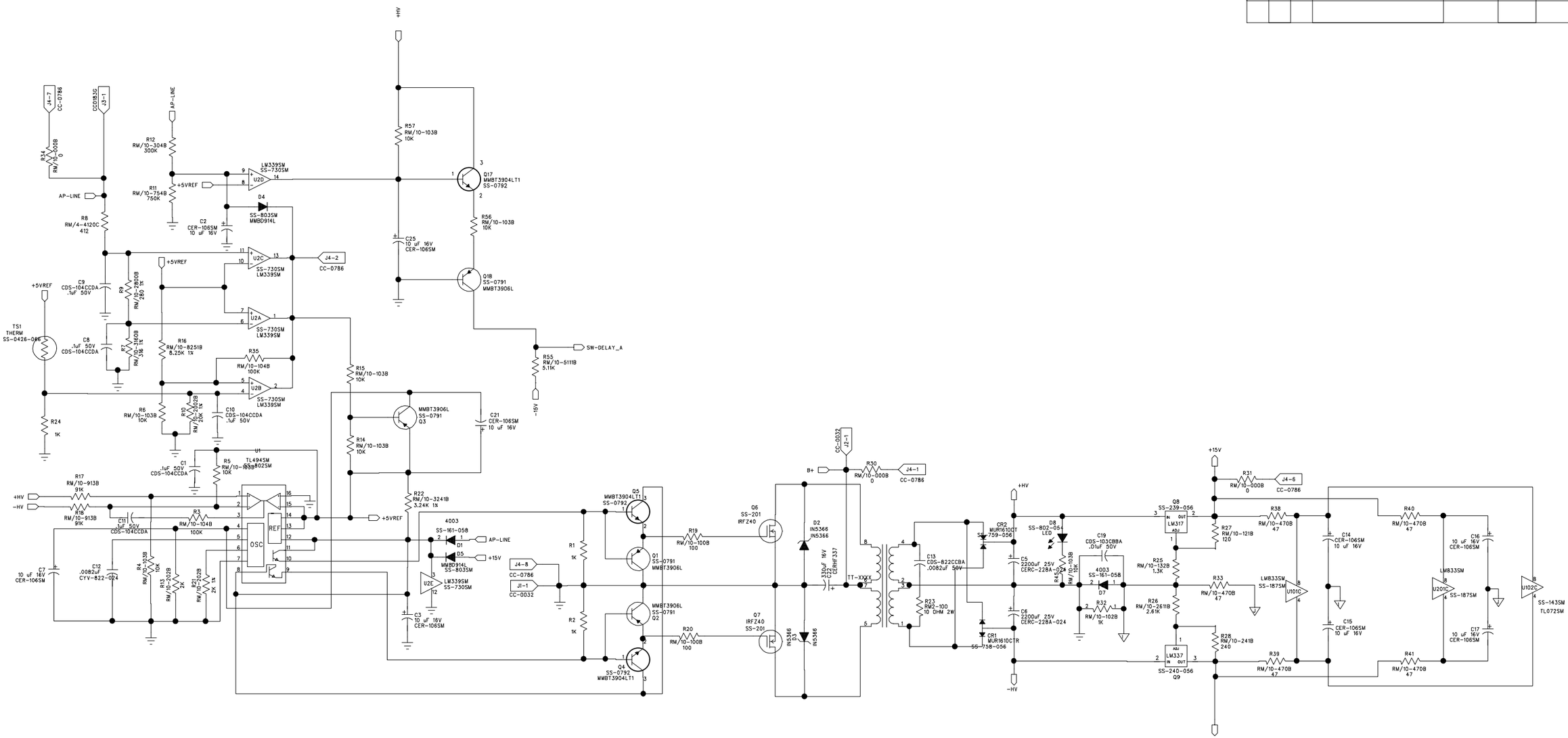

DWN	C.CASTREJON	7/25/95	ROCKFORD FOSGATE CORPORATION DIVISION TEMPE AZ
CHK			TITLE: PUNCH 40X2 POWER SUPPLY
ENGR	C.CASTREJON	7/25/95	
APVD	C.CASTREJON	7/25/95	
APVD			SIZE: — SCALE: — SHEET 1 OF 3
MATL/FS			FILE NAME: PC-1088-A PART NO.: — REV: A

REV | FILE NAME: PC-1088-A | PART NO.

PC-1088A.SCH-2 - Mon Nov 23 14:03:28 1998

Z	SYM	DA	REVISION RECORD	AUTHORITY	DRAW	CHECK
			RELEASED			

NOTES: UNLESS SPECIFIED OTHERWISE
1. ALL RESISTORS IN OHMS
2. ALL CAPACITORS IN MICROFARADS
3. COMMON PARTS DESIGNATORS 1 TO 99
4. LEFT CHANNEL DESIGNATORS 101 TO 199
5. RIGHT CHANNEL 201 TO 299

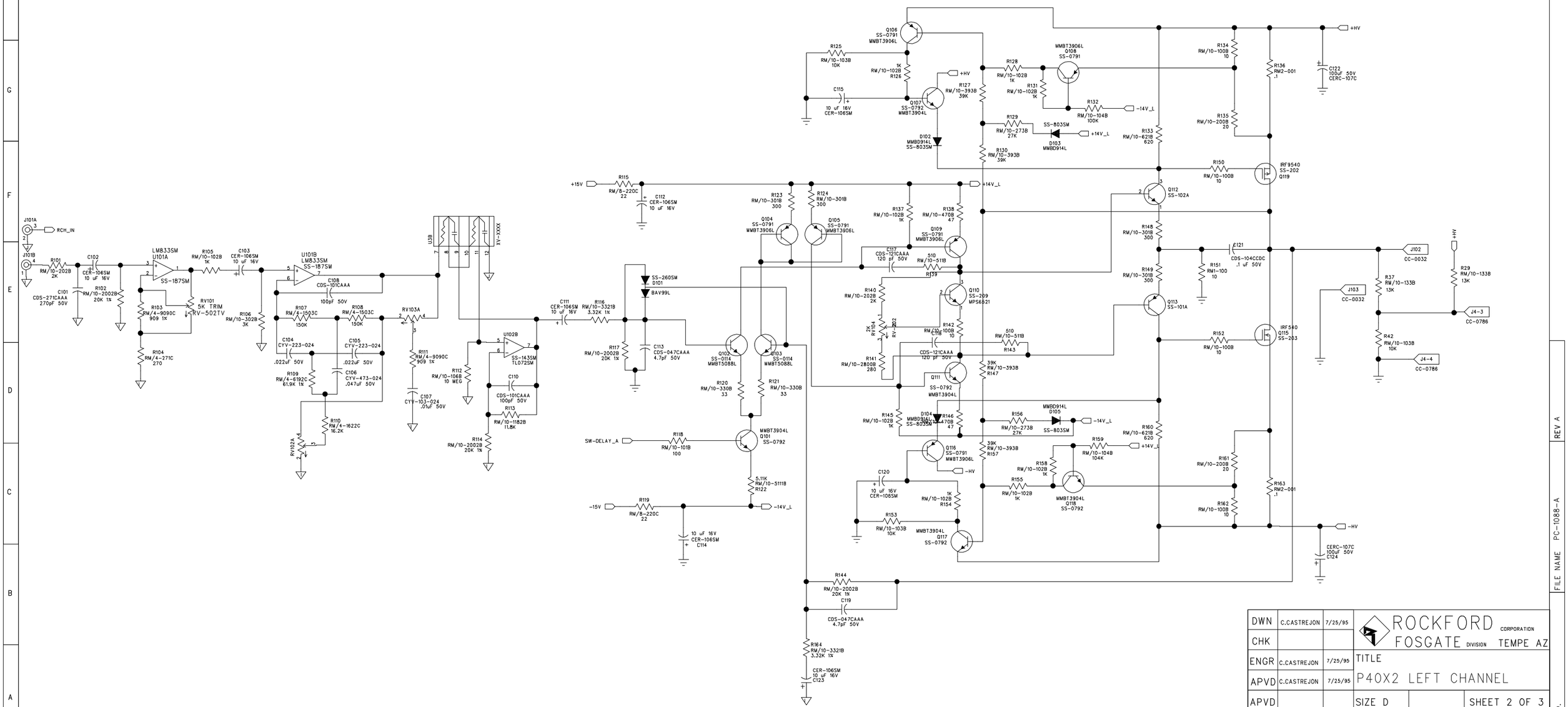

DWN	C.CASTREJON	7/25/95	ROCKFORD FOSGATE CORPORATION DIVISION TEMPE AZ
CHK			
ENGR	C.CASTREJON	7/25/95	TITLE
APVD	C.CASTREJON	7/25/95	P40X2 LEFT CHANNEL
APVD			SIZE D / SHEET 2 OF 3
MATL/FS			FILE NAME PC-1088-A / PART NO. / REV A

REV A
FILE NAME PC-1088-A
PART NO.

Z	SYM	DA	REVISION RECORD	AUTHORITY	DRAW	CHECK
			RELEASED			

NOTES: UNLESS SPECIFIED OTHERWISE
1. ALL RESISTORS IN OHMS
2. ALL CAPACITORS IN MICROFARADS
3. COMMON PARTS DESIGNATORS 1 TO 99
4. LEFT CHANNEL DESIGNATORS 101 TO 199
5. RIGHT CHANNEL 201 TO 299

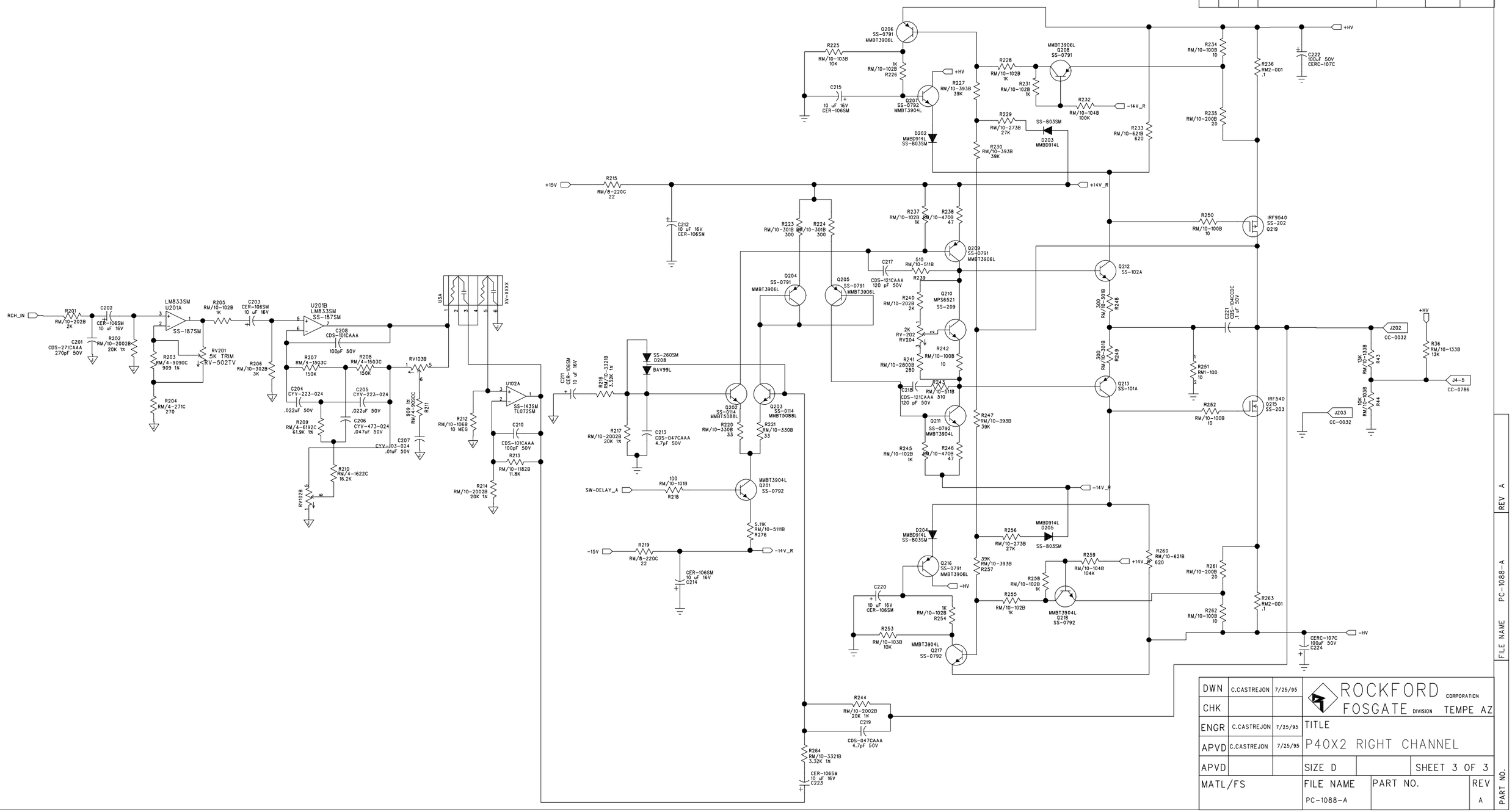

DWN	C.CASTREJON	7/25/95	ROCKFORD FOSGATE CORPORATION DIVISION TEMPE AZ
CHK			
ENGR	C.CASTREJON	7/25/95	TITLE
APVD	C.CASTREJON	7/25/95	P40X2 RIGHT CHANNEL
APVD			SIZE D / SHEET 3 OF 3
MATL/FS			FILE NAME: PC-1088-A / PART NO. / REV: A

REV A | FILE NAME PC-1088-A | PART NO.