NOTES: UNLESS SPECIFIED OTHERWISE
1. ALL RESISTORS IN OHMS
2. ALL CAPACITORS IN MICROFARADS
3. LEFT CHANNEL SHOWN ONLY
4. COMMON PARTS DESIGNATORS FROM 1 TO 99
5. LEFT CHANNEL 101 TO 199
6. RIGHT CHANNEL 201 TO 299

CORD	REV	REVISION RECORD	AUTHORITY	DATE
	A	PRODUCTION RELEASE	W.C.	3-94
	B	ECO 3450	W.C.	3-94
	C	ECO 3476	W.C.	3-94
	D	ECO 3498	W.C.	3-94
	E	ECO 3507	W.C.	4-94
	F	ECO 3508	W.C.	4-94
	G	ECO 3513	W.C.	4-94
	H	ECO 3519	W.C.	4-94
	I	ECO 3521	W.C.	4-94
	J	ECO 3558	W.C.	5-94
	K	ECO 3571	W.C.	8-94
	L	ECO 3601	W.C.	8-94
	M	ECO 3633		

330UF 25V CAP (CERHF-337A-024) HAS BEEN REPLACED. REF DES C12 13
NEW PART # 330UF 63V (CERHF-337D-024)
PER ECO 3633

SS-209SM (BCX70J) HAS BEEN REPLACED
REF DES Q2 5 9 101 102 103
104 112 114 120 131
NEW PART # SS-0792 (MMBT3904LT1)
SS-210SM (BCX71J) HAS BEEN REPLACED
REF DES. Q1 3 4 8 105 106 107 108
109 115 119 126 129 130
NEW PART # SS-0791 (MMT3906LT1)
PER ECO 3571

PART # RM/10-303B (30K 5%) HAS BEEN REPLACED. REF DES R194 R294
NEW PART # RM/10-2002B (20K 1%)
NEW REF DES R156 R256
PER ECO 3519

NEW PART HAS BEEN ADDED TO SCHEMATIC
CER-1065M (10UF 35V)
REF DES C35 C36
PER ECO 3521

PART # RM/10-102B (1.0K 5%) HAS BEEN REPLACED. REF DES R145 245
NEW PART # RM/10-751B (750 OHM 5%)
PER ECO 3508

PART # RM/10-103B 10K 5% HAS BEEN REPLACED. REF DES R129 R229
NEW PART # RM/10-683B 68K 5%
PER ECO 3513

PRIMARY PART # SS-802SM TL494
SUBSTITUTE PART # SS-0722 TL594
PER ECO 3450

PART # RM/10-154B 150K OHM HAS BEEN REPLACED
REF DES R23 AND R24
NEW PART # RM/10-114B 110K OHM
PER ECO 3498

DWN	C.C.	12/93	ROCKFORD FOSGATE CORPORATION DIVISION TEMPE AZ
CHK			
ENGR	C.C.	12/93	TITLE SCHEMATIC PUNCH 60ix OUTPUT
APVD			
APVD			SIZE B SCALE NONE SHEET 1 OF 2
MATL/FS			FILE NAME SCH06941 PART NO. SCH-0694 REV M

NOTES: UNLESS SPECIFIED OTHERWISE
1. ALL RESISTORS IN OHMS
2. ALL CAPACITORS IN MICROFARADS
3. LEFT CHANNEL SHOWN ONLY
4. COMMON PARTS DESIGNATORS FROM 1 TO 99
5. LEFT CHANNEL 101 TO 199
6. RIGHT CHANNEL 201 TO 299

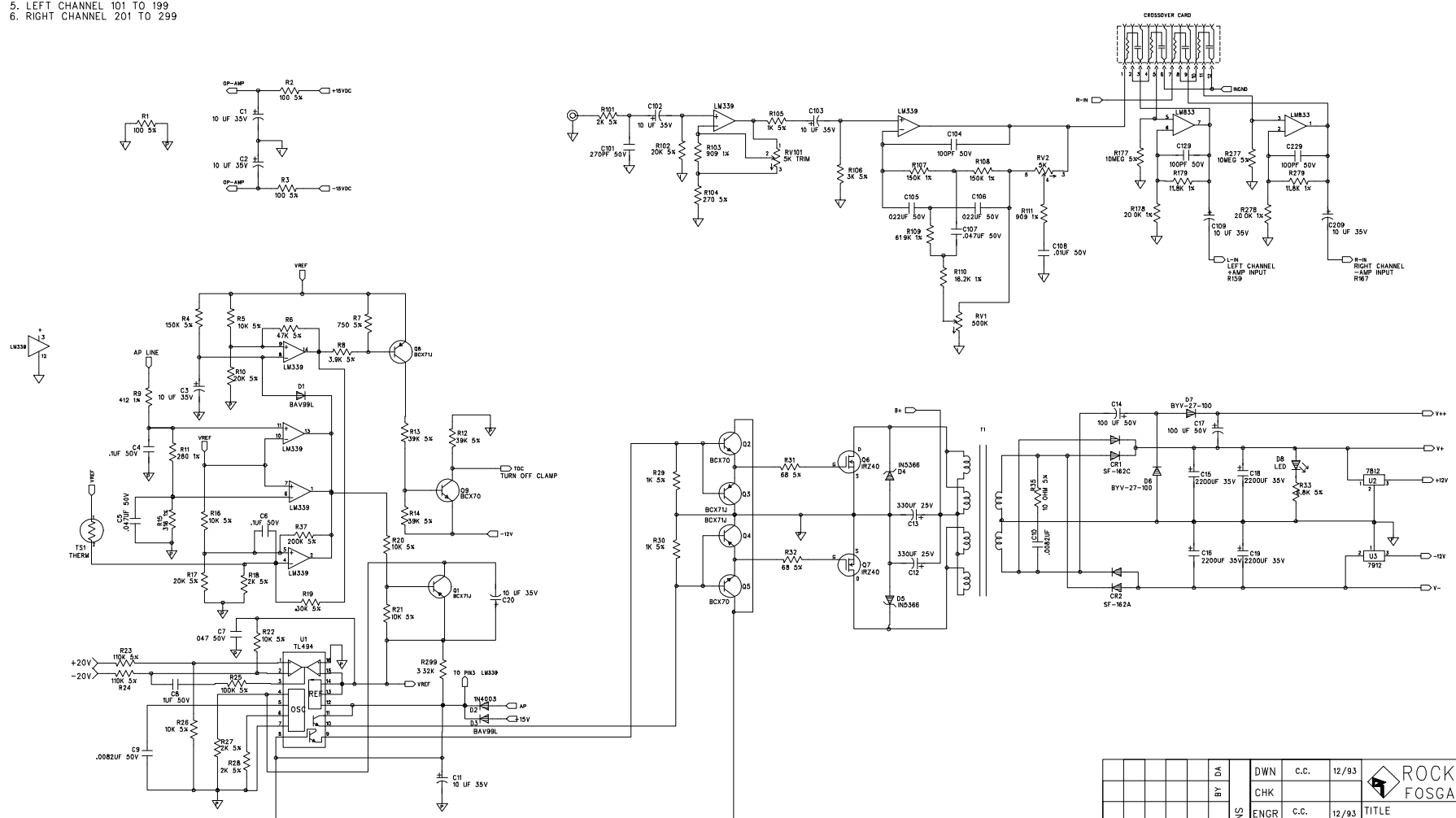

| | | |