DWG. NO.	SH	REV

REVISIONS

ZONE	REV	DESCRIPTION	DATE	APPROVED
	A	ADD RESET SWITCH - SWAP REF DES ON D2 AND D4	02/26/91	WAYNE HARRIS

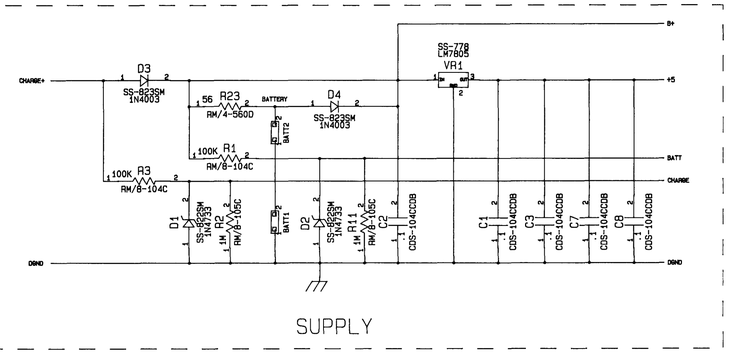

SUPPLY

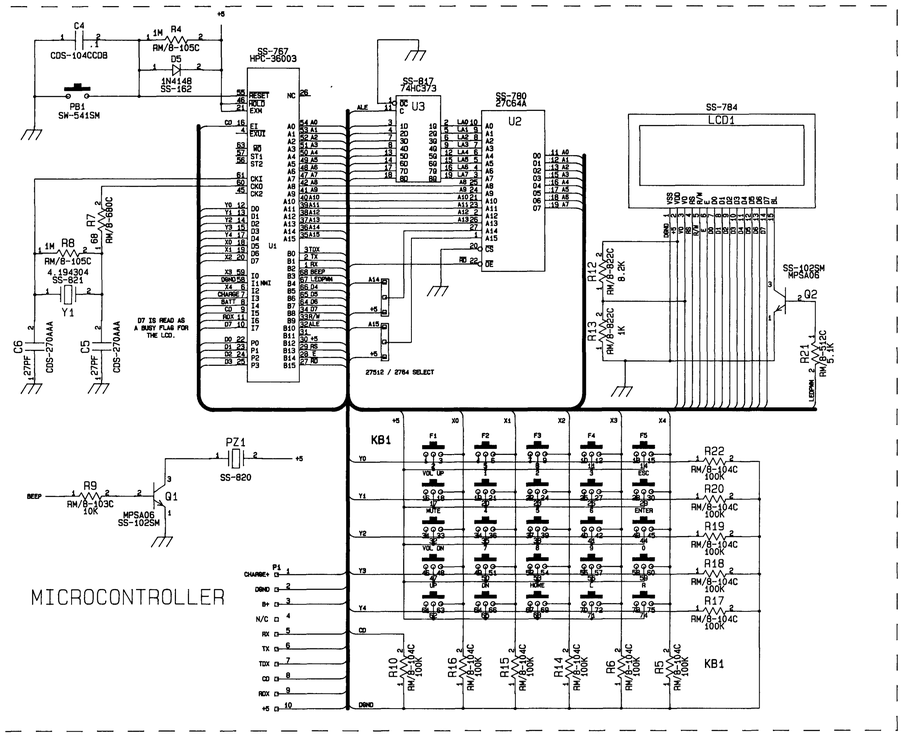

MICROCONTROLLER

KEYBOARD MUX?
27512 SUPPORT
WATCHDOG SUPPORT
LCD TEMP COMPENSATION
SWAP PORT P WITH PORT B
DISCONNECT PIN I7

LAST USED LIST					

DO NOT SCALE DRAWING

	APPROVALS	DATE
DRAWN	WAYNE HARRIS	10/16/90
CHECKED		
FINISH		

TITLE
REMOTE DATA TERMINAL

SYMMETRY

SIZE	DWG NO.	REV
D	SCH-422	A

SCALE | SHEET

DWG. NO.		SH	REV

REVISIONS

ZONE	REV	ECO NO.	DESCRIPTION	DATE	APPROVED
	A		PLOTTED TO HAVE CURRENT SCHEMATIC DWG.	11-92	

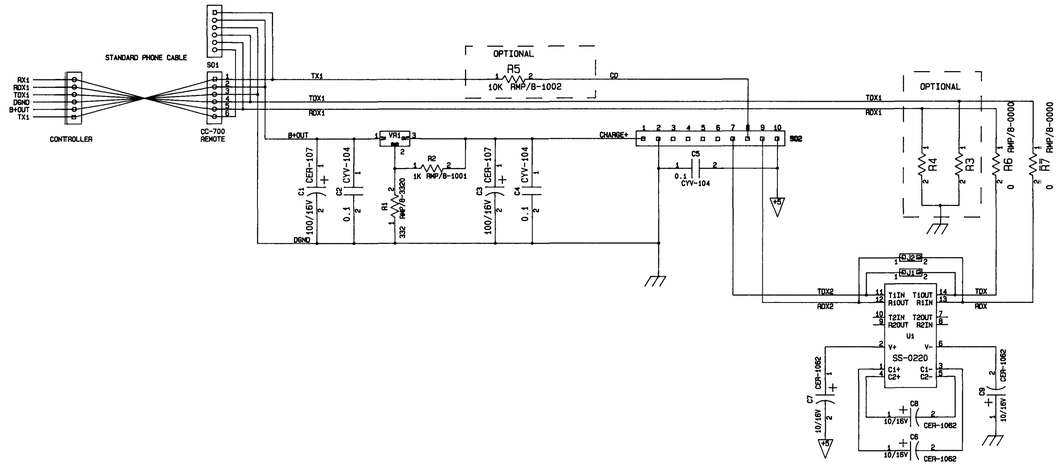

LAST USED LIST	

DO NOT SCALE DRAWING

APPROVALS	DATE
DRAWN WAYNE HARRIS	03/06/91
CHECKED	
FINISH	

TITLE
RDAT COMM BOARD

SYMMETRY

SIZE	DWG NO.	REV
D	SCH-423	A

SCALE | SHEET