REV	ZONE	REVISION RECORD	AUTHORITY	DATE
E			G.R.	3/91
F		ECO 2288	WC	2/92
G		ECO 2301	WC	2/92
H		ECO 2597	WC	5/92

L FRONT

R FRONT

L REAR

R REAR

RIGHT FRONT AMPLIFIER

R 201 –
C 201 –
Q 201 –
U 201 –

RIGHT FRONT

LEFT REAR AMPLIFIER

R 301 –
C 301 –
Q 301 –
U 301 –

LEFT REAR

RIGHT REAR AMPLIFIER

R 401 –
C 401 –
Q 401 –
U 401 –

RIGHT REAR

SCH-P1000
POWER SUPPLY

DRAWING SIZE
"B"

FINAL PRINT
Date 3/11/91
Approval G.R.

DWN		
CHK		
ENGR	CLIFFORD	5/91
APVD	G.R.	2/92
APVD		2-92

SCH-P1000

SCALE: | APPROVED BY: | DRAWN BY | DATE: | REVISED

AMPLIFIER SCHEMATIC

REV. H

DRAWING NUMBER
SCH-P1000

22 X 34 PRINTED ON NO. 1000H CLEARPRINT ®

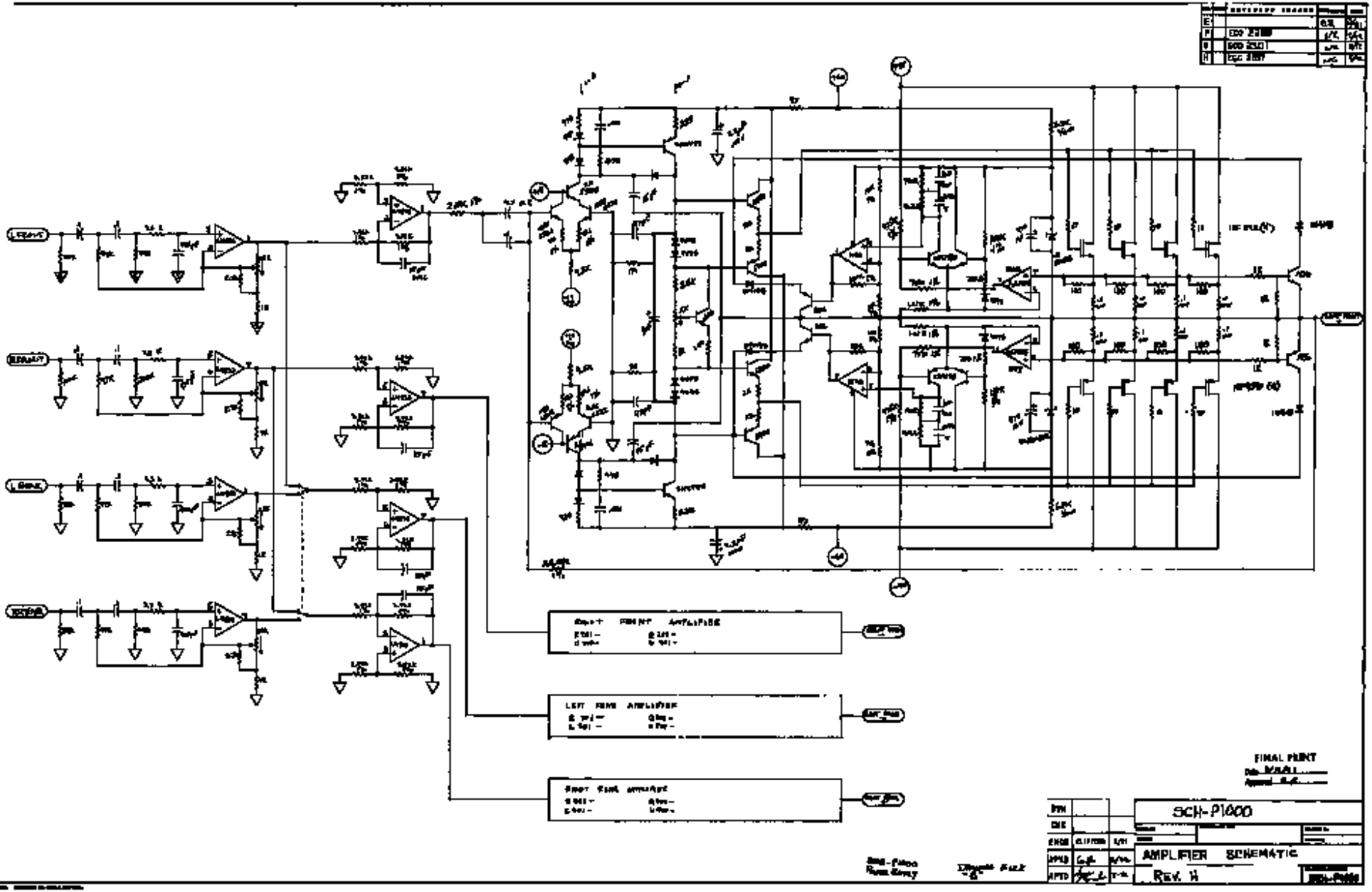
SCH-P1000
AMPLIFIER SCHEMATIC
REV. H
FINAL PRINT