CORD	REV	REVISION RECORD	AUTHORITY	DATE
	C	PRODUCTION RELEASE ECO 3114	W.C.	4-93
	D	ECO 3244	W.C.	6-93
	E	ECO 3257	W.C.	6-93
	F	ECO 3305		
	I	ECO 3403		

NOTE:
PRIMARY PART # SS-RFP15N06-047 TO-220 HARRIS (2)
REF DES Q1, Q2
WITH HW-884 INSUL PAD
SUBSTITUTE PART # SS-760-047 MTA15N06 (1)
PER ECO 3244

PRIMARY PART # SS-806-050 SF22 100V
REF DES D5
SUBSTITUTE PART # SS-0572-050 SF24 200V
PER ECO 3305

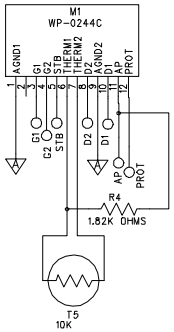

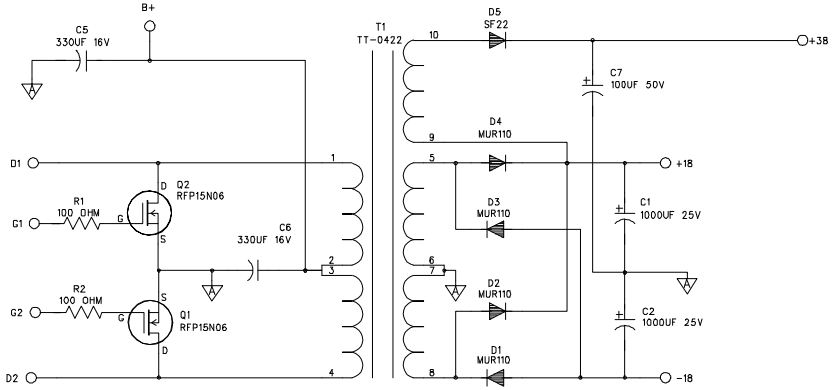

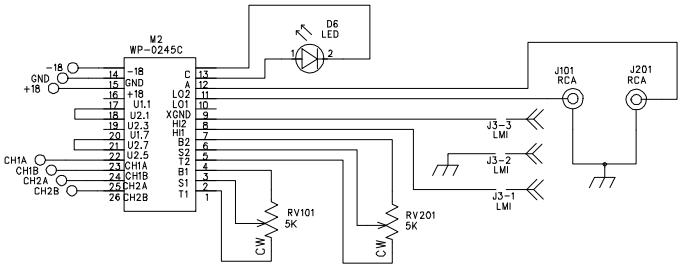

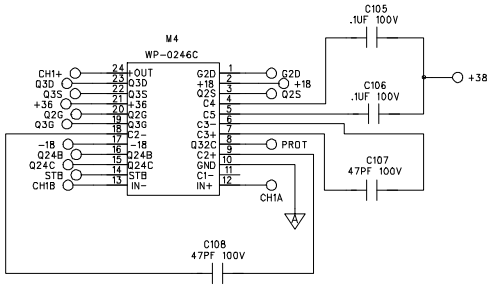

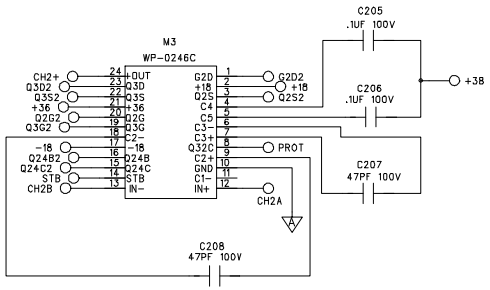

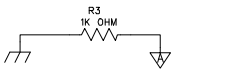

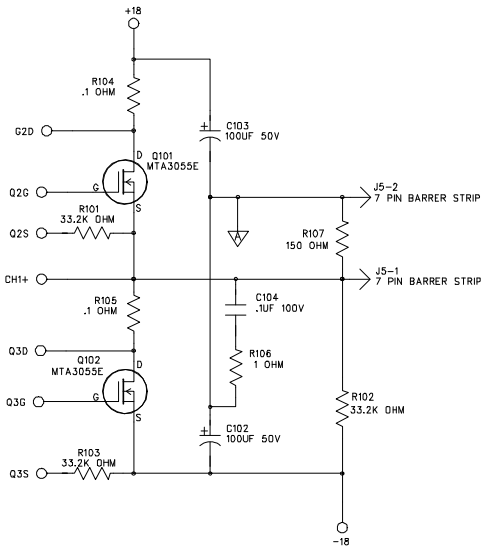

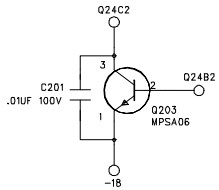

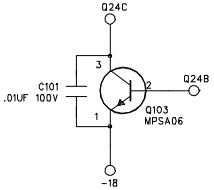

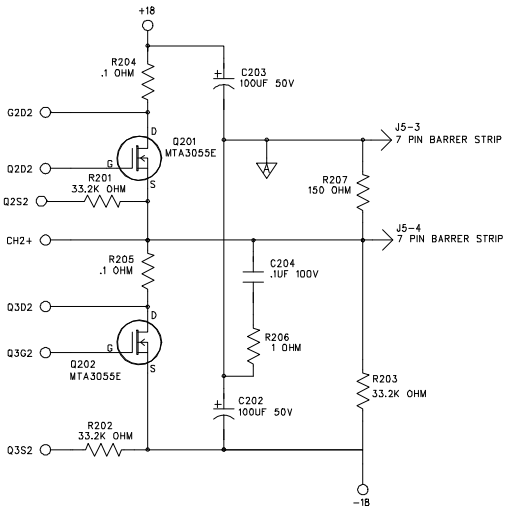

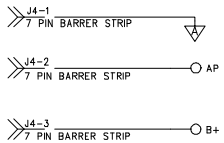

DWN	HAMBERLIN	2-15-93	ROCKFORD CORPORATION FOSGATE DIVISION TEMPE AZ		
CHK			TITLE SCHEMATIC: SERIES ONE 2030 AMPLIFIER		
ENGR	HAMBERLIN	2-15-93			
APVD					
APVD			SIZE C	SCALE	SHEET 1 OF 1
MATL/FS			FILE NAME SCH0177	PART NO. SCH-0177	REV I