NOTES: UNLESS SPECIFIED OTHERWISE
1. ALL RESISTORS IN OHMS
2. ALL CAPACITORS IN MICROFARADS
3. LEFT CHANNEL SHOWN ONLY
4. COMMON PARTS DESIGNATORS FROM 1 TO 99
5. LEFT CHANNEL 300 TO 399
6. RIGHT CHANNEL 400 TO 499

NOTES
FOR REF DES Q4, 6, 306, 307,
308, 316, 317, 318, 320
PRIMARY PART # BCX70J
SECONDARY PART # BC846BL
PER ECO 3419

PRIMARY PART # SS-802SM TL494
SUBSTITUTE PART # SS-0722 TL594
PER ECO 3450

SS-760-047 HAS BEEN CHANGED
REF DES Q1 2
NEW PART # SS-760-046
PER ECO 3617

SS-731-047 HAS BEEN CHANGED
REF DES Q326 327 426 427
NEW PART # SS-731-046
PER ECO 3617

SS-731 (MTA3055E) HAS BEEN
REPLACED. REF DES Q326 327 426 427
NEW PART # SS-257 (MTP3055E)
PER ECO 3699

PART # RM/4-203C 20K 5% HAS BEEN
REPLACED. REF DES R340 R440
NEW PART # RM/4-752C 7.5K 5%
PER ECO 3525

PART # RM/10-821B 820 OHM 5% HAS BEEN
REPLACED. REF DES R325 R425
NEW PART # RM/10-152B 1.5K 5%
PER ECO 3517

SS-209SM (BCX70J) HAS BEEN REPLACED
REF DES Q4 6 306 307 308 316 317 318 320
NEW PART # SS-0792 (MMBT3904LT1)

SS-210SM (BCX71J) HAS BEEN REPLACED
REF DES. Q3 5 7 301 302 303 309
312 313 314 315
NEW PART # SS-0791 (MMT3906LT1)
NEW PART # SS-204SM (MMBT5401L)
FOR REF DES 312
PER ECO 3572

RM/10-105B (1M 5%) REF DES R35
HAS BEEN REMOVED PER ECO 3640

CERHF-337I (330UF 16V) HAS BEEN
REPLACED. REF DES C5 6
NEW PART # CERHF-337BL (330UF 35V)
PER ECO 3667

REPLACE RM/10-272B (2.7K)
REF DES R302 R402
WITH RM/10-102B (1K)
REPLACE CDS-101CAAA
REF DES C312 C412
WITH CDS-221CAAA
PER ECO 4083

SS-760-046 HAS BEEN CHANGED
REF DES Q1 2
NEW PART # SS-RFP15N06 (TO-220 HARRIS)
PER ECO 3678

SS-260SM (BAV99L) HAS BEEN CHANGED
REF DES D7
NEW PART # SS-162-051 (IN4148)
PER ECO 3654

CERHF-337BL-024 (330uf 16v) HAS
BEEN REPLACED. REF DES C5 6
NEW PART # CERHF-337I-024 (330uf 16v)
PER ECO 3673

SS-760-046 (MTA15N06) HAS BEEN
REPLACED. REF DES Q1, 2
NEW PART # SS-0936-046 (MTAJ27N06E)
PER ECO 3700

SS-0936 (MTAJ27N06E) HAS BEEN
REPLACED. REF DES Q1 2
NEW PART # SS-RFP15N06 (TO-220 HARRIS)
PER ECO 3701

SS-204SM (MMBT5401L) HAS BEEN DELETED
REF DES Q312 412
RM/10-114B (110K) HAS BEEN DELETED
REF DES R328 428
PER ECO 3737

CORD	REV	REVISION RECORD	AUTHORITY	DATE
	A	PRODUCTION RELEASE	W.C.	01-94
	B	ECO 3419	W.C.	3-94
	C	ECO 3450	W.C.	3-94
	D	ECO 3517	W.C.	4-94
	E	ECO 3525	W.C.	4-94
	F	ECO 3572	W.C.	8-94
	G	ECO 3617	W.C.	9-94
	H	ECO 3640	W.C.	10-94
	I	ECO 3654	W.C.	12-94
	J	ECO 3667	W.C.	10-94
	K	ECO 3673	W.C.	12-94
	L	ECO 3678	W.C.	10-94
	M	ECO 3699	H.M.	12-94
	N	ECO 3700	H.M.	12-94
	O	ECO 3701	H.M.	12-94
	P	ECO 3737	H.M.	12-94
	Q	ECO 3818	H.M.	5-95
	R	ECO 3854	H.M.	5-95
	S	ECO 4083	H. M.	11-95

DWN	C.C.	9-93	ROCKFORD FOSGATE CORPORATION DIVISION TEMPE AZ		
CHK					
ENGR	C.C.	9-93	TITLE SERIES ONE 2300 SCHEMATIC		
APVD					
APVD			SIZE B	SCALE	SHEET 1 OF 2
MATL/FS			FILE NAME SCH0511F	PART NO. SCH-0511-F	REV S

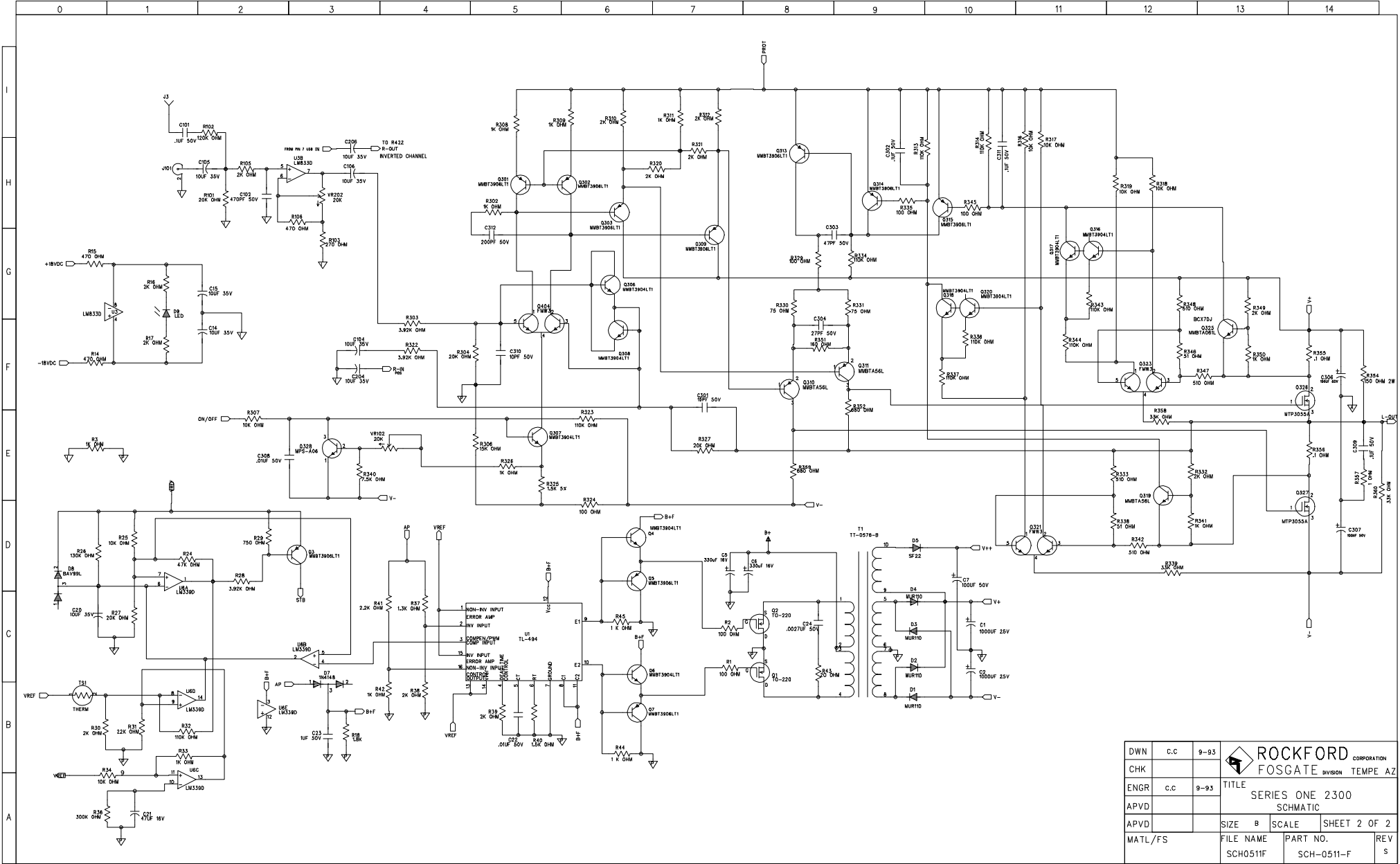

DWN	C.C	9-93	ROCKFORD FOSGATE DIVISION TEMPE AZ CORPORATION	
CHK				
ENGR	C.C	9-93	TITLE: SERIES ONE 2300 SCHMATIC	
APVD				
APVD			SIZE B	SCALE: SHEET 2 OF 2
MATL/FS			FILE NAME: SCH0511F	PART NO.: SCH-0511-F REV S