NOTES: UNLESS SPECIFIED OTHERWISE
1. ALL RESISTORS IN OHMS
2. ALL CAPACITORS IN MICROFARADS
3. LEFT CHANNEL SHOWN ONLY
4. COMMON PARTS DESIGNATORS FROM 1 TO 99
5. LEFT CHANNEL 300 TO 399
6. RIGHT CHANNEL 400 TO 499

CORD	REV	REVISION RECORD	AUTHORITY	DATE
	T	ECO 3786 SS-0967 (IRFZ42) HAS BEEN REPLACED. REF DES Q1 2 NEW PART # SS-761 (MTA30N06E)	H.M.	5-95
	U	ECO 3818	H.M.	5-95
	V	ECO 3833	H.M.	5-95
	W	ECO 3854	H.M.	5-95
	X	ECO 3988 REPLACE SS-1051-046 (MTAJ50N05HD) REF DES Q1 Q2 WITH SS-761-046 (MTA30N06E)	H.M.	12-95

CORD	REV	REVISION RECORD	AUTHORITY	DATE
	A	PRODUCTION RELEASE	W.C.	01-94
	B	ECO 3419 REF DES Q4 Q6 Q8 Q306 Q307 308, 316, 317, 318, 320 PRIMARY PART # BCX70J SECONDARY PART # BC846BL	H.M.	3-94
	C	ECO 3458	H.M.	3-94
	D	ECO 3450 PRIMARY PART # SS-802SM TL494 SUBSTITUTE PART # SS-0722 TL594	H.M.	3-94
	E	ECO 3506 NEW PART # SS-761 MTA30N06E REF DES Q1 Q2 SS-0343 MTP50N05E HAS BEEN REPLACED	H.M.	3-94
	F	ECO 3532 NEW PART # RM/10-752B (7.5K 1/10W 5%) REPLACED. REF DES R340 R440 RM/10-2002B (20.0K (10W 5%) HAS BEEN NEW PART # RM/10-152B (1.5K 1/10W 5%) REPLACED. REF DES R325 R425 RM/10-821B (820 OHM 1/10W 5%) HAS BEEN	H.M.	5-94
	G	ECO 3564 SS-210SM (BCX71J) HAS BEEN REPLACED. REF DES Q312, 412 NEW PART # SS-204SM (MTB5401L(	H.M.	8-94
	H	ECO 3573	H.M.	8-94
	I	ECO 3618 SS-760-047 (MTA15N06) HAS BEEN REPLACED. REF DES Q326 327 426 427 NEW PART # SS-760 (MTA15N06)	H.M.	8-94
	J	ECO 3640	H.M.	10-94
	K	ECO 3655 SS-260SM (BAV99L) HAS BEEN REPLACED REF DES D7 NEW PART # SS-162-051 1N4148	H.M.	12-94
	L	ECO 3667 CERHF-337I (330UF 16V) HAS BEEN REPLACED. REF DES C5 6 NEW PART # CERHF-337BL (330UF 35V)	H.M.	10-94
	M	ECO 3673 CERHF-337BL-024 (330uf 16v) HAS BEEN REPLACED. REF DES C5 6 NEW PART # CERHF-337I-024 (330uf 16v)	H.M.	12-94
	N	ECO 3678 SS-760-046 HAS BEEN CHANGED REF DES Q326 327 426 427 NEW PART # SS-RFP15N06 (TO-220 HARRIS)	H.M.	10-94
	O	ECO 3686	H.M.	3-95
	P	ECO 3715 CDS-104CCDB (.1UF 50V) HAS BEEN REPLACED BY CER-105C (1UF 50V) REF DES C302 311 402 411 RM/10-433B (43K OHM 5%) HAS BEEN REPLACED BY RM/10-513B (51K OHM 5%) REF DES R358 360 458 460 RM/10-510 (51 OHM 5%) HAS BEEN REPLACED BY RM/10-680B (68 OHM 5%) REF DES R338 346 438 446 SS-760 (MTA15N06) HAS BEEN REPLACED BY SS-0936 (MTAJ27N06E) REF DES Q326 327 426 427	H.M.	3-95
	Q	ECO 3716 SS-0936 (MTAJ27N06E) HAS BEEN REPLACED. REF DES Q326 327 426 427 NEW PART #SS-RFP15N06 (TO-220 HARRIS) CER-105C (1UF 50V) HAS BEEN REPLACED. REF DES C302 311 402 411 NEW PART # CDS-104CCDM (.1UF 50V) RM/10-513B (51K OHM) HAS BEEN REPLACED. REF DES R358 360 458 460 NEW PART # RM/10-433B (43K OHM) RM/10-680B (68 OHM) HAS BEEN REPLACED. REF DES R338 346 438 446 NEW PART # RM/10-510B (51 OHM)	H.M.	3-95
	R	ECO 3737 SS-204SM (MMBT5401L) HAS BEEN DELETED REF DES Q312 412 RM/10-114B (110K) HAS BEEN DELETED REF DES R328 428	H.M.	3-95
	S	ECO 3758 SS-761 (MTA30N06E) HAS BEEN REPLACED. REF DES Q1 2 NEW PART # SS-0967 (IRFZ42)	H.M.	3-95

DWN	C.C.	9-93	ROCKFORD FOSGATE CORPORATION DIVISION TEMPE AZ
CHK			
ENGR			TITLE: SERIES 1 2600 SCHEMATIC SCHEMATIC
APVD	C.C.	9-93	
APVD			SIZE B SCALE SHEET 1 OF 2
MATL/FS			FILE NAME: SCH0512F PART NO.: SCH-0512-F REV: X

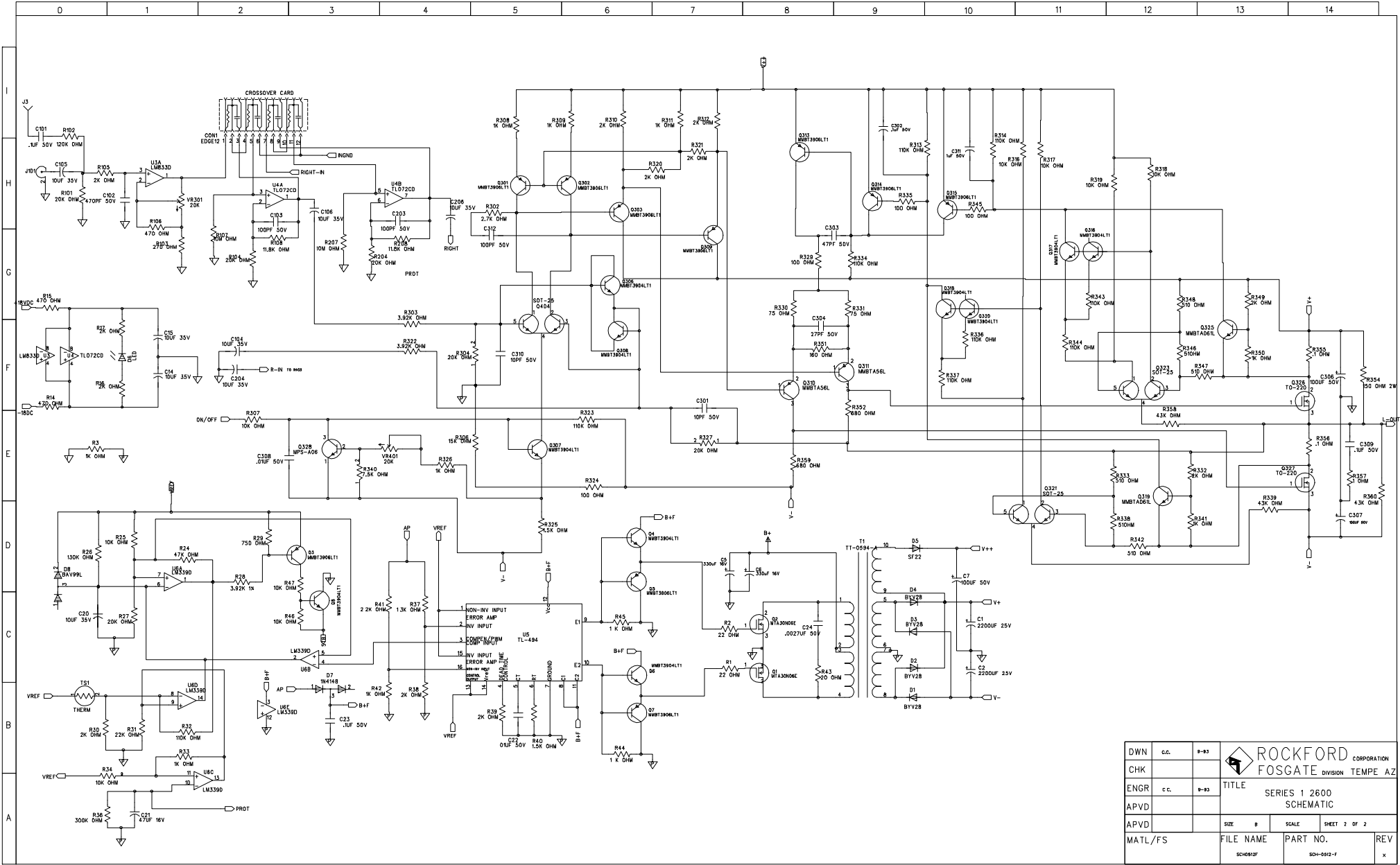

DWN	C.C.	9-93	ROCKFORD FOSGATE CORPORATION DIVISION TEMPE AZ	
CHK				
ENGR	C.C.	9-93	TITLE SERIES 1 2600 SCHEMATIC	
APVD				
APVD			SIZE B	SCALE SHEET 2 OF 2
MATL/FS			FILE NAME SCH0512F	PART NO. SCH-0512-F REV x