LEFT FRONT AMP

RIGHT FRONT AMP — IC900A — R216 - R236, C207 - C211, Q200 - Q207, D200 - D203, F200, F201

LEFT REAR AMP — IC800B — R316 - R336, C307 - C311, Q300 - Q307, D300 - D303, F300, F301

RIGHT REAR AMP — IC900B — R416 - R436, C407 - C411, Q400 - Q407, D400 - D403, F400, F401

FINAL PRINT
Date 10/24/90
Approval

ROCKFORD CORP. TEMPE, ARIZONA

SCALE: ——	SCH-P300
DATE: 3/7/86	DRAWN BY JRF, REVISED J.P.R
POWER 300 AMPLIFIER SECTION	
REV. C	DRAWING NUMBER

22 X 34 PRINTED ON NO. 1000H CLEARPRINT ®

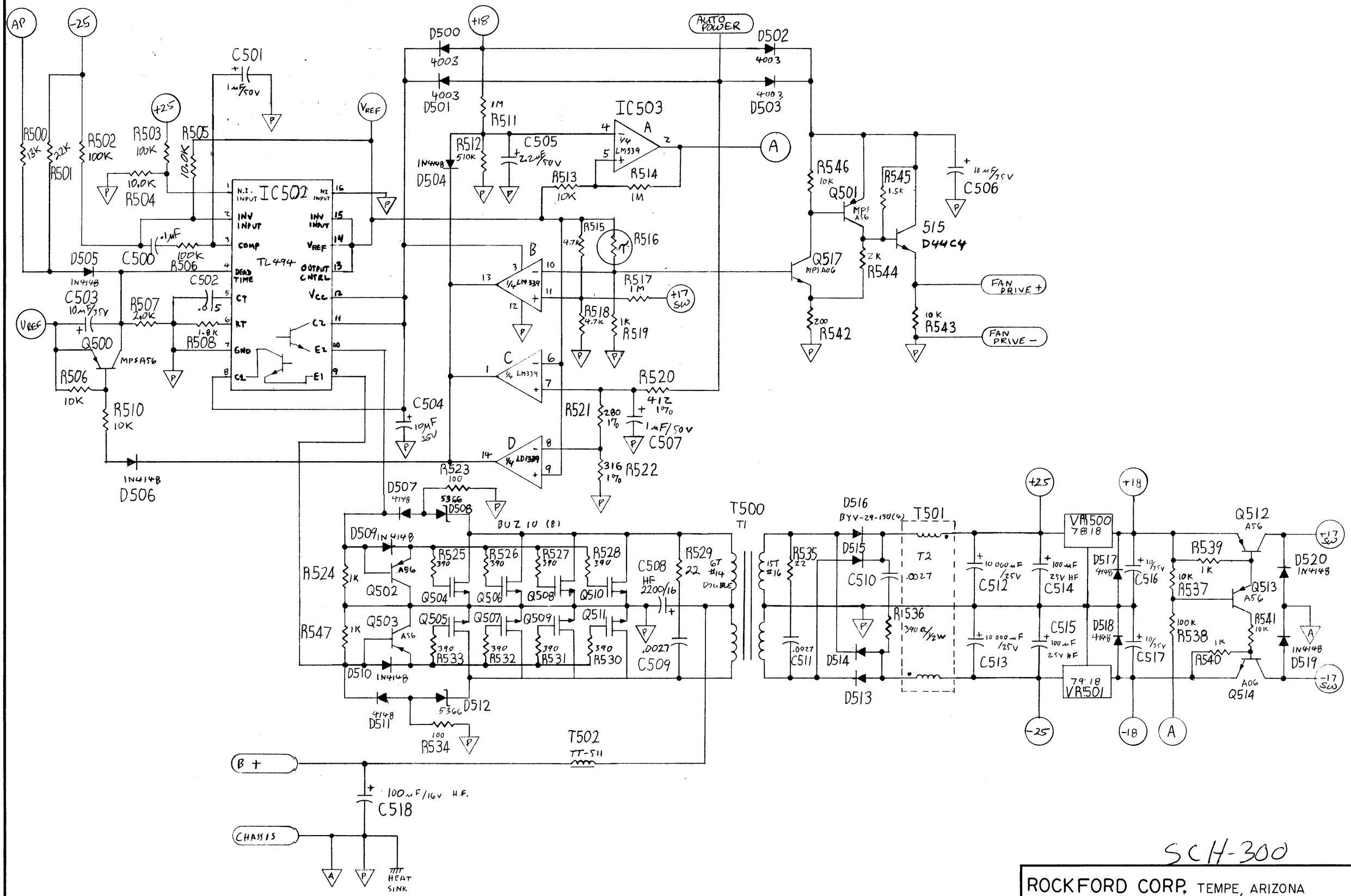

SCH-300

FINAL PRINT
Date 10/29/90
Approval

ROCKFORD CORP. TEMPE, ARIZONA		
SCALE: —		DRAWN BY JRF
DATE: 3/7/86		REVISED
POWER 300 POWER SUPPLY		
REV. C		DRAWING NUMBER

17 X 22 PRINTED ON NO. 1000H CLEARPRINT