NOTES: UNLESS SPECIFIED OTHERWISE
1. ALL RESISTORS IN OHMS
2. ALL CAPACITORS IN MICROFARADS
3. RIGHT FRONT CHANNEL SHOWN ONLY
4. COMMON PARTS DESIGNATORS FROM 1 TO 99
5. RIGHT REAR DESIGNATORS FROM 100 TO 199
6. LEFT REAR DESIGNATORS FROM 200 TO 299
7. RIGHT FRONT DESIGNATORS FROM 300 TO 399
8. LEFT FRONT DESIGNATORS FROM 400 TO 499

CORD	REV	REVISION RECORD	AUTHORITY	DATE
	X	ECO 4044 CHANGE CDS-100CAAA TO CDS-047CAAA CHANGE CDS-101CAAA TO CDS221CAAA	H. MILLER	10-95
	Y	ECO 4055 REV G PCBOARD RELEASE	H. MILLER	11-95
	Z	ECO 3988 REPLACE SS-1051-046 (MTAJ50N05HD) REF DES Q1 Q2 WITH SS-761-046 (MTA30N06E)	H.M.	12-95
	AA	ECO 4256 REPLACE REF DES D2 SS-75B (1610CTR) WITH SS-0757 (1620CTR)	H.M.	03-96

CORD	REV	REVISION RECORD	AUTHORITY	DATE
	A	PRODUCTION RELEASE	W.C.	01-94
	B	ECO 3419	W.C.	3-94
	C	ECO 3450	W.C.	3-94
	D	ECO 3494	W.C.	3-94
	E	ECO 3495	W.C.	3-94
	F	ECO 3533	W.C.	5-94
	G	ECO 3564	W.C.	8-94
	H	ECO 3566	W.C.	8-94
	I	ECO 3619	W.C.	8-94
	J	ECO 3640	W.C.	10-94
	K	ECO 3656	W.C.	10-94
	L	ECO 3667	W.C.	10-94
	M	ECO 3678	W.C.	10-94
	N	ECO 3673	H.M.	12-94
	O	ECO 3686	H.M.	12-94
	P	ECO 3713	H.M.	12-94
	Q	ECO 3737	H.M.	12-94
	R	ECO 3758	H.M.	12-94
	S	ECO 3791	H.M.	12-94
	T	ECO 3818	H.M.	5-95
	U	ECO 3833	H.M.	5-95
	V	ECO 3854	H.M.	5-95
	W	ECO 3983 REPLACE SS-RFP15N06-046 REF DES Q126 Q127 Q226 Q227 Q326 Q327 Q426 Q427 WITH SS-760-046	H.M.	9-95

SS-210SM (BCX71J) HAS BEEN
REPLACED. REF DES Q112, 113
Q312, Q412
NEW PART # SS-204SM (MTB5401L(
PER ECO 3564

RM/10-105B (1M 5%) REF DES R35
HAS BEEN REMOVED PER ECO 3640

CERHF-337BL-024 (330uf 16v) HAS
BEEN REPLACED. REF DES C3 5 6
NEW PART # CERHF-337I-024 (330uf 16v)
PER ECO 3673

SS-204SM (MMBT5401L) HAS BEEN DELETED
REF DES Q112 212 312 412
RM/10-114B (110K) HAS BEEN DELETED
REF DES R128 228 328 428
PER ECO 3737

SS-260SM (BAV99L) HAS BEEN REPLACED
REF DES D7
NEW PART # SS-162-051 1N4148
PER ECO 3656

SS-761 (MTA30N6E) HAS BEEN
REPLACED. REF DES Q1 2 9 10
NEW PART # SS-0967 (IRFZ42)
PER ECO 3758

SS-209SM (BCX70J) HAS BEEN REPLACED
REF DES Q4 6 306 307 308 316 317 318 320
NEW PART # SS-0792 (MMBT3904LT1)

SS-210SM (BCX71J) HAS BEEN REPLACED
REF DES. Q3 5 7 301 302 303 309
312 313 314 315
NEW PART # SS-0791 (MMT3906LT1)
PER ECO 3566

SS-760-046 HAS BEEN CHANGED
REF DES Q126 127 226 227
326 327 426 427
NEW PART # SS-RFP15N06 (TO-220 HARRIS)
PER ECO 3678

PRIMARY PART # SS-802SM TL494
SUBSTITUTE PART # SS-0722 TL594
PER ECO 3450

SS-760-047 HAS BEEN REPLACED
REF DES Q126 127 226 227
326 327 426 427
NEW PART # SS-760-046
PER ECO 3619

CERHF-337I (330UF 16V) HAS BEEN
REPLACED. REF DES C3 5 6
NEW PART # CERHF-337BL (330UF 35V)
PER ECO 3667

SS-760 (MTA15N06) HAS BEEN
REPLACED. REF DES Q126 127
226 227 326 327 426 427
NEW PART # SS-RFP15N06 (TO-220 HARRIS)
PER ECO 3713

SS-0967 (IRFZ42) HAS BEEN
REPLACED. REF DES Q1 2 9 10
NEW PART # SS-761 (MTA30N06E)
PER ECO 3791

FOR REF DES Q4, 6, 8, 306, 307
308, 316, 317, 318, 320
PRIMARY PART # BCX70J
SECONDARY PART # BC846BL
PER ECO 3419

PRIMARY PART # SS-802SM TL494
SUBSTITUTE PART # SS-0722 TL594
PER ECO 3450

RM/10-821B (820 OHM 1/10W 5%) HAS BEEN
REPLACED. REF DES R125 R225 R325 R425
NEW PART # RM/10-152B (1.5K 1/10W 5%)
RM/10-2002B (20.0K /10W 5%) HAS BEEN
REPLACED. REF DES R140 R240 R340 R440
NEW PART # RM/10-752B (7.5K 1/10W 5%)
PER ECO 3533

PRIMARY PART IS SS-RFP15N06-047
TO-220 HARRIS
REF DES Q126, 127, 226, 227,
326, 327, 426, 427
SECONDARY PART # IS SS-760-047
MTA15N06
PER ECO 3494

NOTES
FOR REF DES Q4, 6, 8, 306, 307
308, 316, 317, 318, 320
PRIMARY PART # BCX70J
SECONDARY PART # BC846BL
PER ECO 3419

DWN	C.C.	10-93	ROCKFORD CORPORATION FOSGATE DIVISION TEMPE AZ
CHK			
ENGR	C.C.	10-93	TITLE SERIES ONE 4600 SCHEMATIC
APVD			
APVD			SIZE B / SCALE / SHEET 1 OF 2
MATL/FS			FILE NAME: SCH0513G / PART NO.: SCH-0513-G / REV: AA

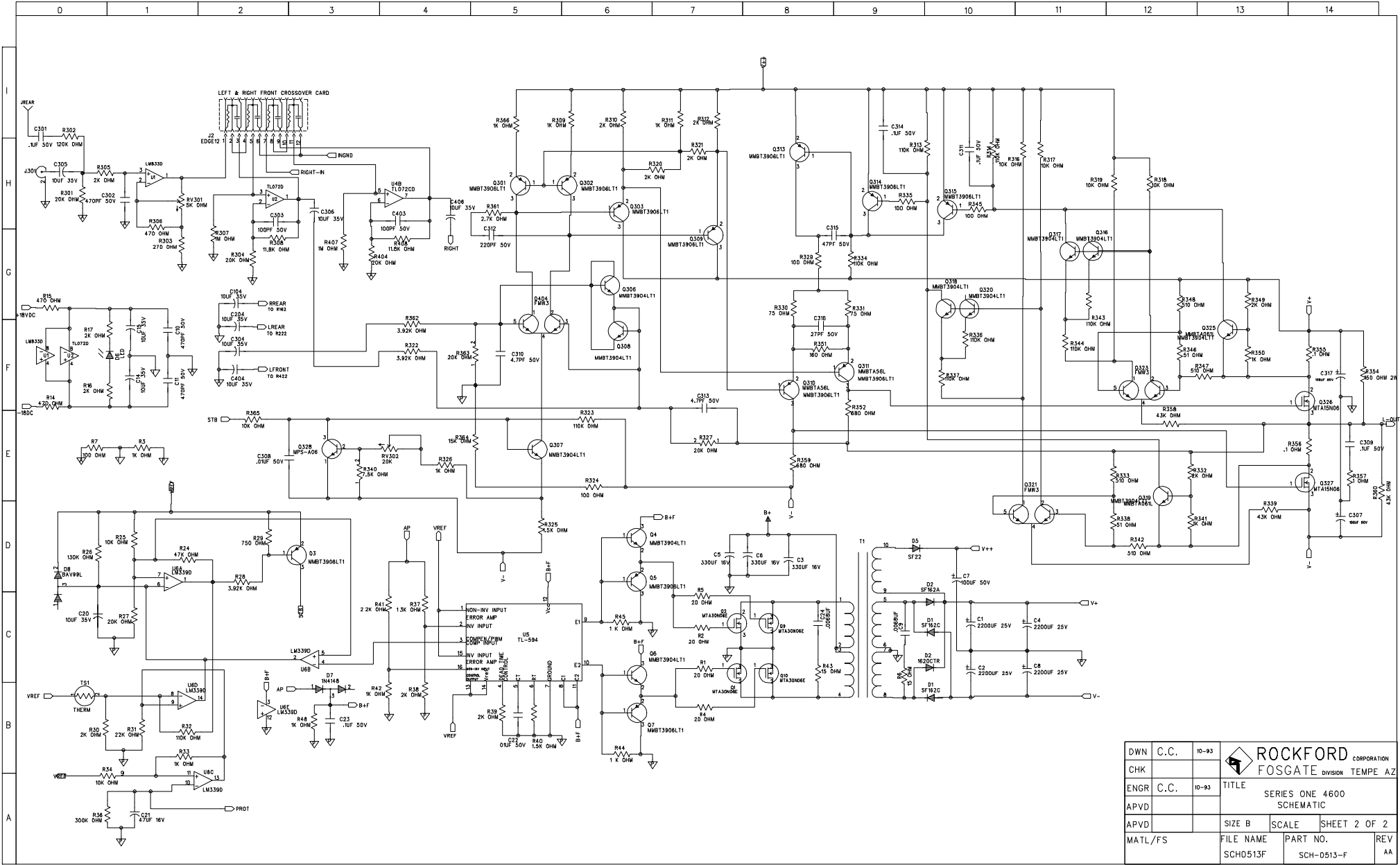

DWN	C.C.	10-93	ROCKFORD FOSGATE CORPORATION DIVISION TEMPE AZ	
CHK				
ENGR	C.C.	10-93	TITLE: SERIES ONE 4600 SCHEMATIC	
APVD				
APVD			SIZE B	SCALE / SHEET 2 OF 2
MATL/FS			FILE NAME: SCH0513F	PART NO.: SCH-0513-F / REV: AA