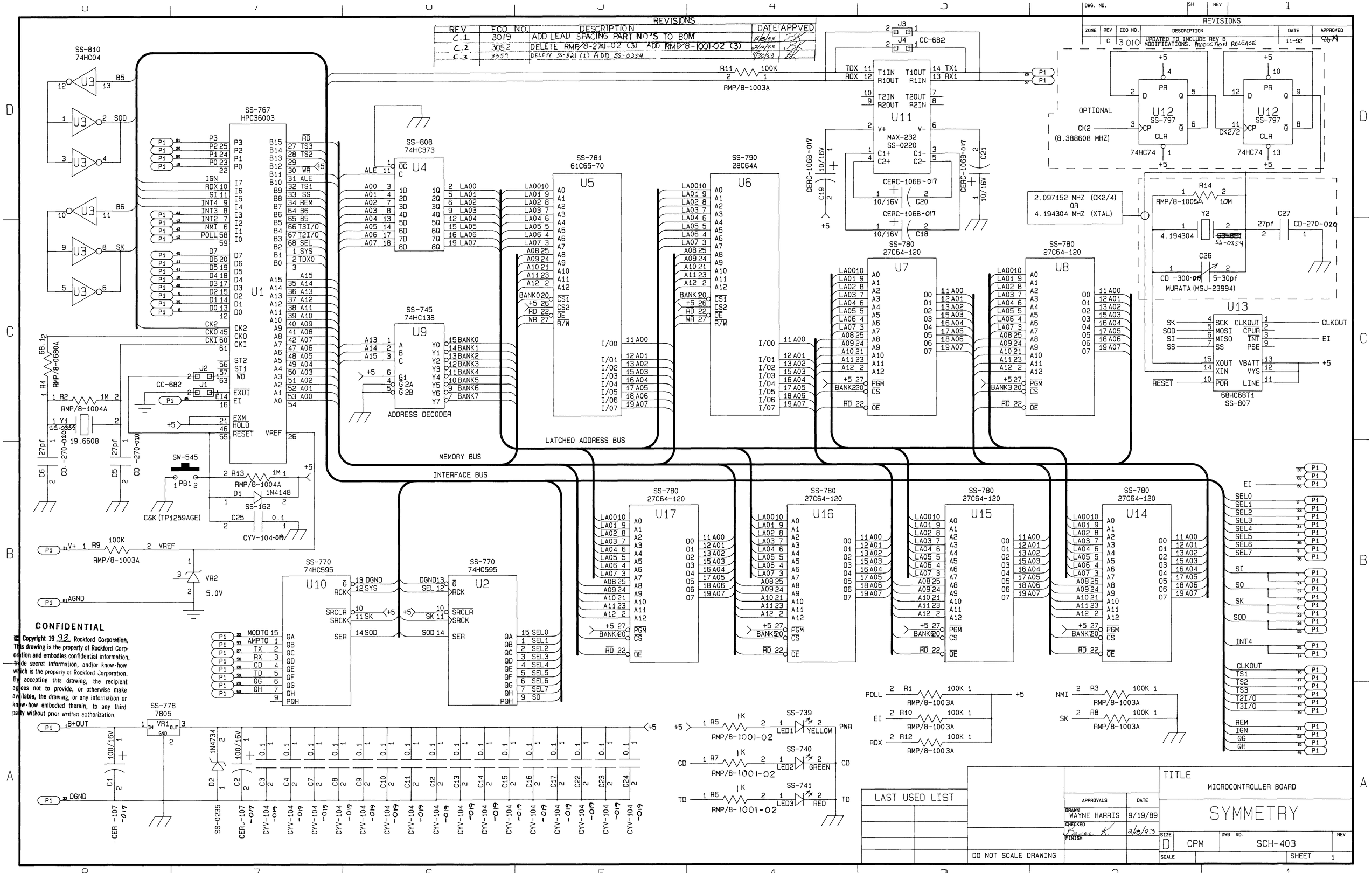

REVISIONS
REV | ECO NO. | DESCRIPTION | DATE | APPVED
C.1 | 3019 | ADD LEAD SPACING PART NO'S TO BOM | 2/10/93
C.2 | 3052 | DELETE RMP/8-2741-02 (3) ADD RMP/8-1001-02 (3) | 2/10/93
C.3 | 3359 | DELETE SS-821 (1) ADD SS-0354 | 4/30/93
REVISIONS
ZONE | REV | ECO NO. | DESCRIPTION | DATE | APPROVED
C | 3010 | UPDATED TO INCLUDE REV B MODIFICATIONS. PRODUCTION RELEASE | 11-92
SS-810 74HC04
SS-767 HPC36003
SS-808 74HC373
SS-745 74HC138
ADDRESS DECODER
SS-781 61C65-70
SS-790 28C64A
SS-780 27C64-120
SS-770 74HC595
SS-778 7805
SS-739
SS-740
SS-741
MEMORY BUS
INTERFACE BUS
LATCHED ADDRESS BUS
MAX-232 SS-0220
OPTIONAL
CK2 (8.388608 MHZ)
2.097152 MHZ (CK2/4) OR 4.194304 MHZ (XTAL)
MURATA (MSJ-23994)
68HC68T1 SS-807
SW-545
C&K (TP1259AGE)
CONFIDENTIAL
© Copyright 1993 Rockford Corporation. This drawing is the property of Rockford Corporation and embodies confidential information, trade secret information, and/or know-how which is the property of Rockford Corporation. By accepting this drawing, the recipient agrees not to provide, or otherwise make available, the drawing, or any information or know-how embodied therein, to any third party without prior written authorization.
LAST USED LIST
DO NOT SCALE DRAWING
APPROVALS | DATE
DRAWN WAYNE HARRIS 9/19/89
CHECKED 2/10/93
FINISH
TITLE MICROCONTROLLER BOARD
SYMMETRY
SIZE D CPM
DWG NO. SCH-403
REV
SCALE
SHEET 1