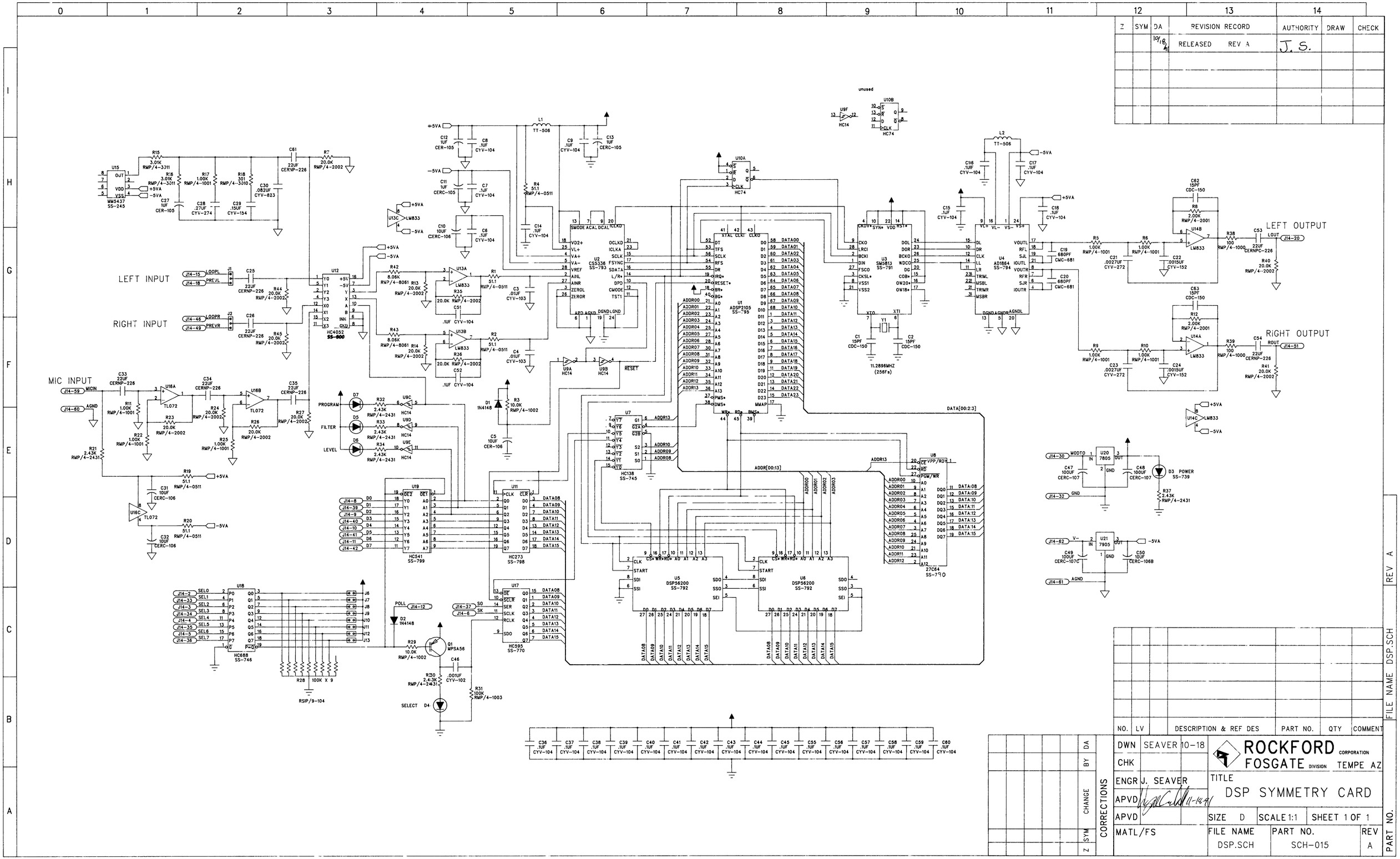

Z	SYM	DA	REVISION RECORD	AUTHORITY	DRAW	CHECK
		10/18/91	RELEASED REV A	J. S.		

NO.	LV	DESCRIPTION & REF DES	PART NO.	QTY	COMMENT

Z	SYM	CHANGE	BY	DA

CORRECTIONS

DWN SEAVER 10-18
CHK
ENGR J. SEAVER
APVD 11-18-91
APVD
MATL/FS

ROCKFORD CORPORATION
FOSGATE DIVISION TEMPE AZ

TITLE
DSP SYMMETRY CARD

SIZE D | SCALE 1:1 | SHEET 1 OF 1

FILE NAME DSP.SCH | PART NO. SCH-015 | REV A

REV A
FILE NAME DSP.SCH
PART NO.

DSP.SCH Sheet 1 – Tue Nov 12 17:06:38 1991

Z	SYM	DA	REVISION RECORD	AUTHORITY	DATE	CHECK
			RELEASED REV A	JS.	10/91	

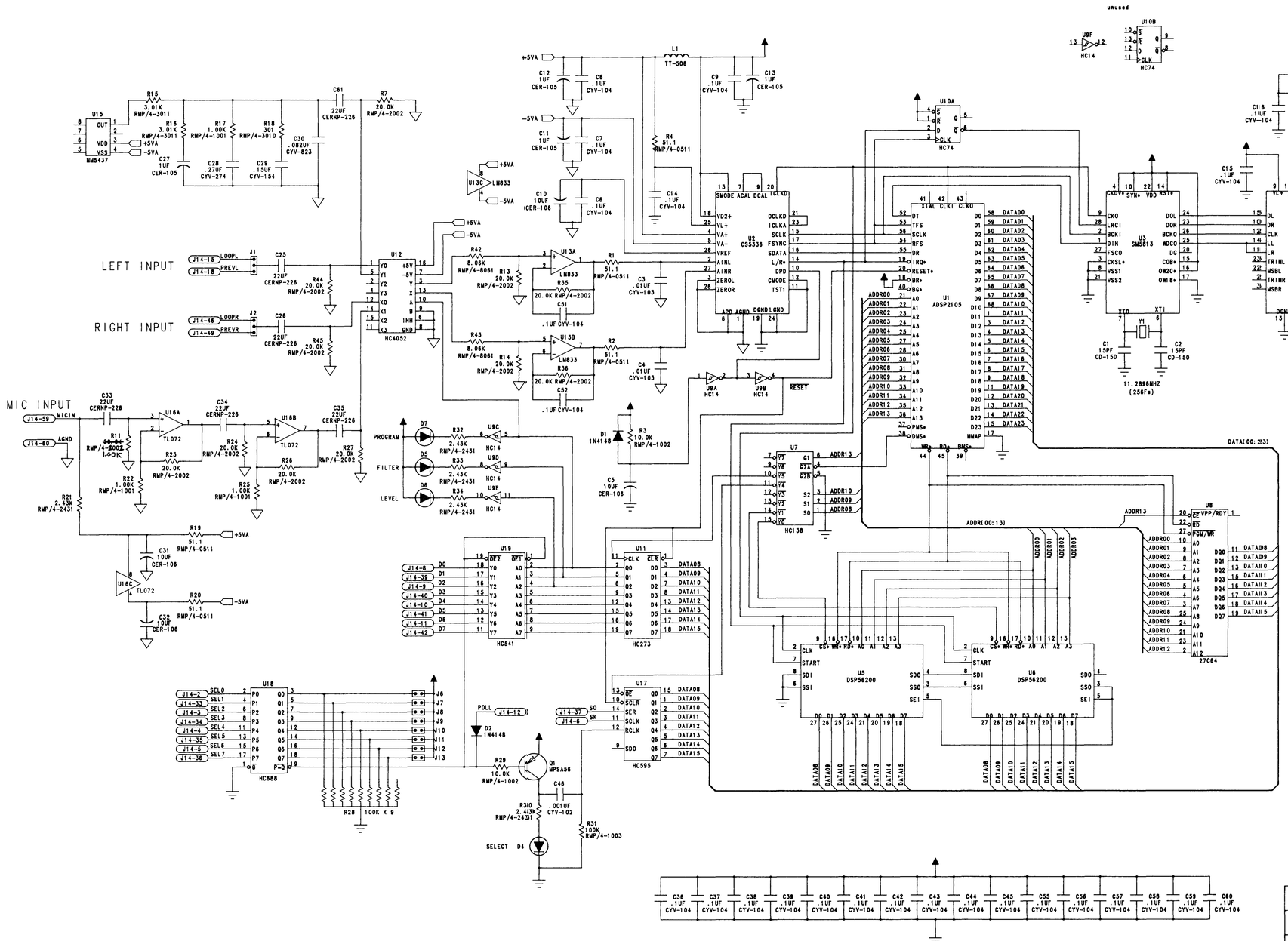

NO.	LV	DESCRIPTION & REF DES	PART NO.	QTY	COMMENT

	DA	BY	CHANGE
CORRECTIONS			
	Z	SYM	

DWN	SEAVER 10-18	ROCKFORD FOSGATE CORPORATION DIVISION TEMPE AZ
CHK		
ENGR		TITLE: DSP SYMMETRY CARD
APVD		
APVD		SIZE D | SCALE 1:1 | SHEET 1 OF 1
MATL/FS		FILE NAME: DSP.SCH | PART NO.: SCH-015 | REV: A

FILE NAME DSP.SCH

REV A

PART NO.